DESIGN AND ANALYSIS OF A ROBOTIC FINGER WITH INTEGRATED TWO-SPEED GEARBOX

Prepared by:
Mohamed Ayman Aldreamly

Courses:
Mechanical Design Project
Theory of Machine
Kinematics

Supervisor:
me

Alazhar University
Faculty of Engineering
Department of Mechatronics Engineering

March 2026

Contents

- PROJECT OBJECTIVES AND PLANNING

1.1.1 Objectives and Constraints 5
1.1.2 Planning 6
1.2 PRELIMINARY DESIGN 6
1.3 PHALANX ANALYSIS 7
1.4 PHALANX ANGLES 8
1.4.1 Defining Angles 8
1.4.2 Measured Angles 8
1.4.3 Angles Achieved 9
1.4.4 Angle vs. Time 9
2.1 Objective 10
2.2 Finger Geometry 10
2.3 Reference Configurations 10
2.4 Joint Coordinate Equations 11
2.5 Calculated Joint Coordinates 12
2.6 First Linkage System 12
2.7 Second Linkage System 13
2.8 Motion Transfer Explanation 14
2.9 Final Design Parameters 15
3.1.4 Motor Selection 19
3.1.5 Derivation of Required Reduction Ratios 19
3.1.6 Performance Summary 20
3.2.1 Gear Tooth Selection and Ratio Implementation 21
3.2.2 Preliminary Gear Geometry 22
3.2.3 Gear Force Calculations 23
3.2.4 Gear Tooth Bending Check (Lewis Equation) 24
3.3.1 Shaft Design (Bending + Torsion) 25
3.5.2 Input shaft bearings 35
3.5.3 Intermediate shaft bearings 35

3.5.4 Output shaft bearings 36
3.5.6 Should we use flanged miniature bearings or plain bushings? 38
3.5.7 Proposed Final Distribution 38
- **Gearbox–Finger Mechanical Coupling**

5.1 System Integration Concept 42
5.2 Mechanical Coupling Method 43
5.3 Motion Transmission Through the Finger 43
5.4 Advantages of the Direct Coupling Design 44
- **CAD Design and Motion Analysis**

6.1 CAD Modeling of the Robotic Finger 45
6.2 Motion Study Setup 46
6.3 Kinematic Results 47
6.3.1 Angular Displacement 47
6.3.2 Angular Velocity 47
6.3.3 Angular Acceleration 47
6.4 Motion Smoothness Evaluation 48
6.5 Conclusion 48
- **Gearbox CAD Design**

7.1 Design Objective 49
7.2 Overall Configuration 49
7.3 Gear and Shaft Arrangement 49
7.4 Integration of Supporting Components 50
7.5 CAD Modeling and Assembly Verification 50
7.6 Visualization and Representation 50
7.7 Design Validation 51
7.8 Figure Caption 51
- **Finite Element Analysis**

8.1.1 FEA Results and Discussion of the Output Shaft under Torsion Only 52
8.1.2 Analytical Calculation 53
8.1.3 FEA Results 54
8.1.4 Discussion 54
8.1.5 Design Validation 55
8.1.6 Conclusion 55
8.2 FEA Results and Discussion of the Output Shaft under Combined Torsion and Bending 56

8.2.1 Boundary Conditions 56
8.2.2 Shear Stress Evaluation 56
8.2.3 Interpretation 58
8.2.4 Conclusion 58
8.3 Gear Tooth Stress Analysis and Comparison 59
8.3.1 Analytical vs Numerical Comparison 59
8.3.2 2D Finite Element Results 59
8.3.3 3D Finite Element Results 60
8.3.4 Discussion of Differences 60
8.3.5 2D vs 3D Comparison 61
8.3.6 Conclusion 61
8.4 Dog Clutch Structural Analysis 61
8.4.1 Model Description and Assumptions 61
8.4.2 Load Justification 62
8.4.3 Analytical Stress Estimation 62
8.4.4 Finite Element Results 63
8.4.5 Comparison Between Analytical and Numerical Results 64
8.4.5 Engineering Interpretation 65
8.4.6 Conclusion 65
- **Failure Modes Analysis**

9.1 Failure Modes in the Finger Mechanism 66
9.2 Gearbox Failure Modes 67
9.3 Output Shaft Failure Modes 67
9.4 Dog Clutch Failure Modes 68
9.5 System-Level Failure Considerations 68
9.6 Summary of Failure Modes 69
- **Conclusion**

• PROJECT OBJECTIVES AND PLANNING

1.1.1 Objectives and Constraints

The objective of this project is to design and analyze a robotic finger mechanism capable of producing coordinated finger flexion using a compact mechanical transmission system.

The robotic finger consists of three rigid phalanges connected through revolute joints. The motion of the finger is generated by a motor and transmitted through a compact gearbox integrated at the base of the finger.

Unlike tendon-driven robotic fingers, the actuation in this design is achieved through **direct mechanical coupling between the gearbox output shaft and the first phalanx**. The output shaft is oriented **perpendicular to the first phalanx** and connected using a mechanical screw joint.

The coordinated motion of the remaining phalanges is achieved using **two coupled four-bar linkage mechanisms**.

The design therefore integrates two main subsystems:

• A **two-speed gearbox** that provides different torque and speed operating modes.
• A **four-bar linkage mechanism** that coordinates the motion of the three phalanges.

The main design constraints are:

- Compact mechanical structure suitable for a robotic finger base.
- Smooth coordinated motion between phalanges.
- Sufficient output torque to flex the finger.
- Clear mechanical architecture suitable for educational demonstration.

1.1.2 Planning

The project development followed a systematic mechanical design approach consisting of several stages.

The first stage involved defining the motion requirements of the robotic finger and determining representative finger configurations.
The second stage focused on synthesizing a four-bar linkage mechanism capable of reproducing the desired motion of the finger joints.
The third stage involved estimating the torque requirements needed to move the finger mechanism.
The fourth stage consisted of designing a compact gearbox capable of providing two operating modes: high speed motion and high torque operation.
Finally, the gearbox output shaft was integrated directly with the first phalanx using a rigid mechanical connection to transmit rotation to the finger mechanism.

1.2 PRELIMINARY DESIGN

The robotic finger system integrates a gearbox actuator with a mechanical linkage mechanism.

The main structural components of the system are:

• Three rigid phalanges
• Revolute joints connecting the phalanges
• Two four-bar linkage mechanisms
• A compact two-speed gearbox
• A direct mechanical connection between the gearbox output shaft and the first phalanx

The gearbox is mounted at the base of the finger, and its output shaft is oriented perpendicular to the first phalanx.

The shaft is rigidly connected to the first phalanx using a screw connection. When the gearbox output shaft rotates, the first phalanx rotates around its base joint.

The motion of the first phalanx drives the four-bar linkage system, which in turn produces coordinated motion of the second and third phalanges.

This configuration simplifies the mechanical architecture and allows the robotic finger to be driven using a single actuator.

1.3 PHALANX ANALYSIS

The robotic finger consists of three rigid segments representing the phalanges.

Their lengths are:

Phalanx 1 = 50 mm
Phalanx 2 = 30 mm
Phalanx 3 = 20 mm

The motion of the finger is described by the rotation angles of the three phalanges relative to the base.

Three key configurations were defined to represent the range of motion of the finger:

Case 1 – extended finger
Case 2 – intermediate flexion
Case 3 – highly flexed finger

The position of the finger joints was calculated using planar kinematic relations.

The coordinates of the PIP joint are given by

$x_1 = L_1 \cos \theta_1$
$y_1 = L_1 \sin \theta_1$

The DIP joint coordinates depend on the cumulative rotation of the first two phalanges.

The fingertip coordinates depend on the cumulative rotation of all three phalanges.

These calculations define the motion trajectory of the finger and are used as input for the four-bar linkage synthesis.

1.4 PHALANX ANGLES

1.4.1 Defining Angles

To analyze the motion of the robotic finger, three rotational angles were defined corresponding to the rotation of each phalanx relative to its preceding segment.

These angles describe the configuration of the finger and determine the position of the joints during motion.

The angles used in the analysis are:

- $\theta 1$: rotation of **Phalanx 1** relative to the base joint
- $\theta 2$: rotation of **Phalanx 2** relative to Phalanx 1
- $\theta 3$: rotation of **Phalanx 3** relative to Phalanx 2

The cumulative angles used in the kinematic calculations are defined as:

$\alpha 2 = \theta 1 + \theta 2$
$\alpha 3 = \theta 1 + \theta 2 + \theta 3$

These angles determine the orientation of each link when calculating the joint positions in the planar coordinate system.

1.4.2 Measured Angles

Three reference finger configurations were selected to represent the full motion range of the robotic finger.

These configurations correspond to:

1. **Extended finger position**
2. **Intermediate flexion**
3. **Highly flexed finger**

The measured angles for each configuration are:

Configuration	θ1	θ2	θ3
Case 1 (Extended)	−3°	45°	27°
Case 2 (Intermediate)	39°	71°	43°
Case 3 (Flexed)	77°	83°	50°

These values were used as the design targets for the linkage synthesis process.

1.4.3 Angles Achieved

After designing the four-bar linkage systems, the mechanism was able to reproduce the desired finger motion across the three configurations.

The synthesized linkage geometry ensures that the second and third phalanges follow the required angular relationship with the first phalanx.

The coordinated motion is achieved through two coupled linkage systems:

- The **first four-bar linkage** constrains the motion between Phalanx 1 and Phalanx 2.
- The **second four-bar linkage** transfers motion from Phalanx 2 to Phalanx 3.

This mechanism allows the finger to bend in a coordinated manner similar to the motion of a biological finger.

1.4.4 Angle vs. Time

The angular motion of the finger joints depends on the rotational speed of the actuator.

From the gearbox analysis, the motor operates at approximately:

n_motor = 170 rpm

After transmission through the gearbox, the output shaft speed becomes:

- **Speed mode**
  n_out ≈ 56.7 rpm
- **Force mode**
  n_out ≈ 13.3 rpm

As the gearbox output shaft rotates, it drives the rotation of the first phalanx. The motion is then transferred through the four-bar linkages to the remaining phalanges.

This results in a synchronized time-dependent motion of the three finger joints.

• Robotic Finger Four-Bar Linkage Kinematic Synthesis Report

2.1 Objective

The objective of this study is to design a kinematic mechanism for a three-phalanx robotic finger using two coupled four-bar linkage systems.

The first linkage controls the motion relationship between Phalanx 1 and Phalanx 2, while the second linkage transfers motion to Phalanx 3.

The design approach follows a three-position kinematic synthesis method where the finger configuration is defined in three key positions.

2.2 Finger Geometry

Phalanx lengths used in the design:

Phalanx 1: 50 mm

Phalanx 2: 30 mm

Phalanx 3: 20 mm

The base of the finger is defined as the coordinate origin (0,0) and the **horizontal axis** is used as the reference axis for angle measurements.

2.3 Reference Configurations

Three finger configurations were defined to represent the range of motion of the robotic finger.

Case 1 (Extended Position)

- $\theta 1 = -3°$
- $\theta 2 = 45°$
- $\theta 3 = 27°$

Case 2 (Intermediate Position)

- $\theta 1 = 39°$
- $\theta 2 = 71°$
- $\theta 3 = 43°$

Case 3 (Highly Flexed Position)

- θ1 = 77°
- θ2 = 83°
- θ3 = 50°

These three configurations were used to synthesize the linkage geometry.

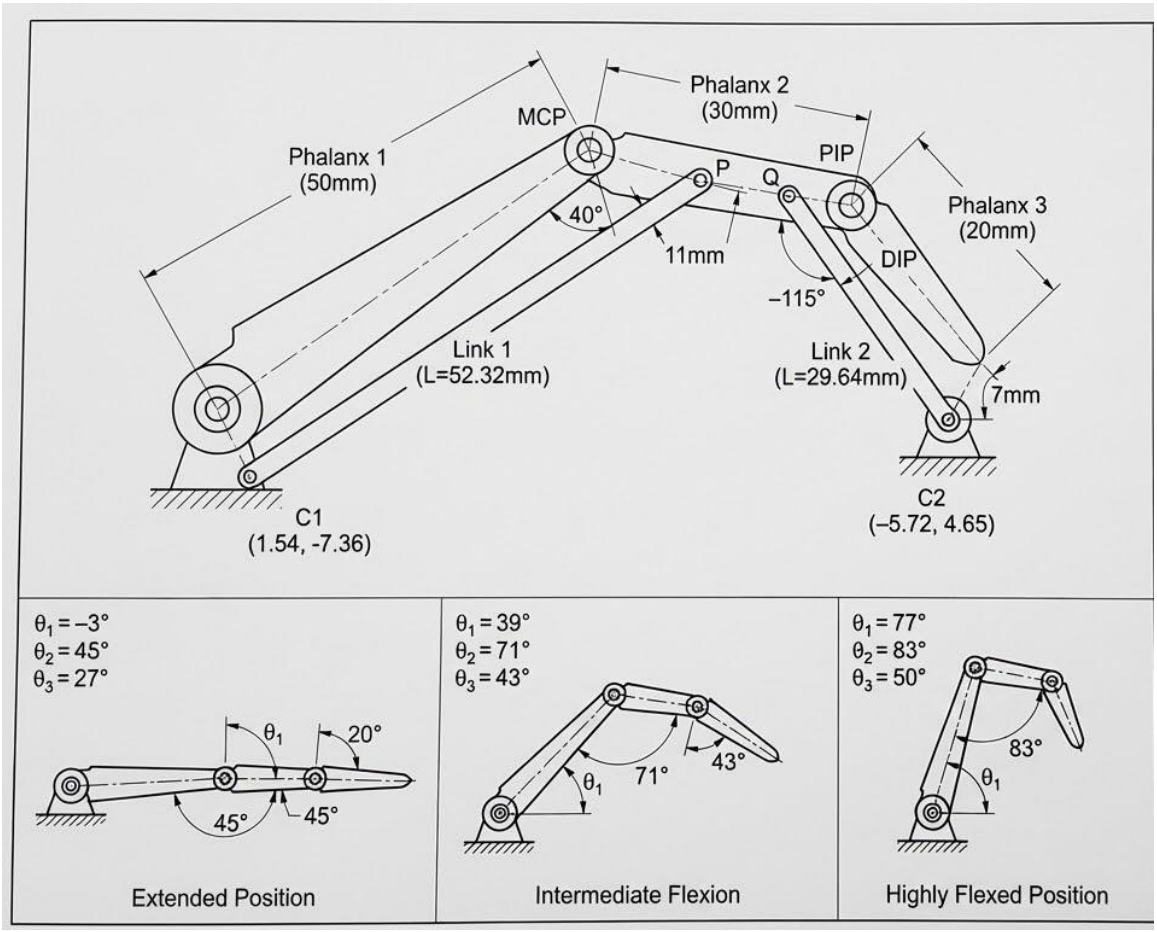

2.4 Joint Coordinate Equations

Position of PIP joint (end of Phalanx 1):

$x1 = L1 \cos(\theta 1)$

$y1 = L1 \sin(\theta 1)$

Position of DIP joint (end of Phalanx 2):

$\alpha 2 = \theta 1 + \theta 2$

$x2 = x1 + L2 \cos(\alpha 2)$

$y2 = y1 + L2 \sin(\alpha 2)$

Position of fingertip (end of Phalanx 3):

$\alpha 3 = \theta 1 + \theta 2 + \theta 3$

$x3 = x2 + L3 \cos(\alpha 3)$

$y3 = y2 + L3 \sin(\alpha 3)$

2.5 Calculated Joint Coordinates

Case 1

PIP: (49.93 , -2.62)

DIP: (72.23 , 17.46)

Tip: (79.39 , 36.13)

Case 2

PIP: (38.86 , 31.47)

DIP: (28.60 , 59.66)

Tip: (10.78 , 68.74)

Case 3

PIP: (11.25 , 48.72)

DIP: (-16.94 , 58.98)

Tip: (-34.26 , 48.98)

2.6 First Linkage System

The first linkage couples the motion between Phalanx 1 and Phalanx 2.

Selected coupler point on Phalanx 2:

Distance from PIP joint = 11 mm

Local angle = 40°

Coordinates of the coupler point were calculated for the three configurations:

P1 = (51.46 , 8.28)

P2 = (29.33 , 36.97)

P3 = (0.91 , 44.96)

Using perpendicular bisectors of the three points, the center of the circle representing the fixed pivot of the first link was determined:

C1 = (1.54 , -7.36)

The length of the first linkage bar (radius of the circle) was calculated as:

Link 1 Length = 52.32 mm

2.7 Second Linkage System

The second linkage transfers motion to Phalanx 3.

Coupling point selection:

Distance from PIP = 7 mm

Angle relative to Phalanx 1 = -115°

Coordinates of the coupling point for the three cases:

Q1 = (46.65 , -8.80)

Q2 = (40.55 , 24.67)

Q3 = (16.76 , 44.41)

After transforming these coordinates into the reference frame of Phalanx 3, the following points were obtained:

Q1' = (-33.68 , 14.47)

Q2' = (-26.53 , 25.74)

Q3' = (-21.91 , 29.47)

The circle passing through these three points defines the fixed pivot location for the second linkage:

C2 = (-5.72 , 4.65)

The corresponding linkage length is:

Link 2 Length = 29.64 mm

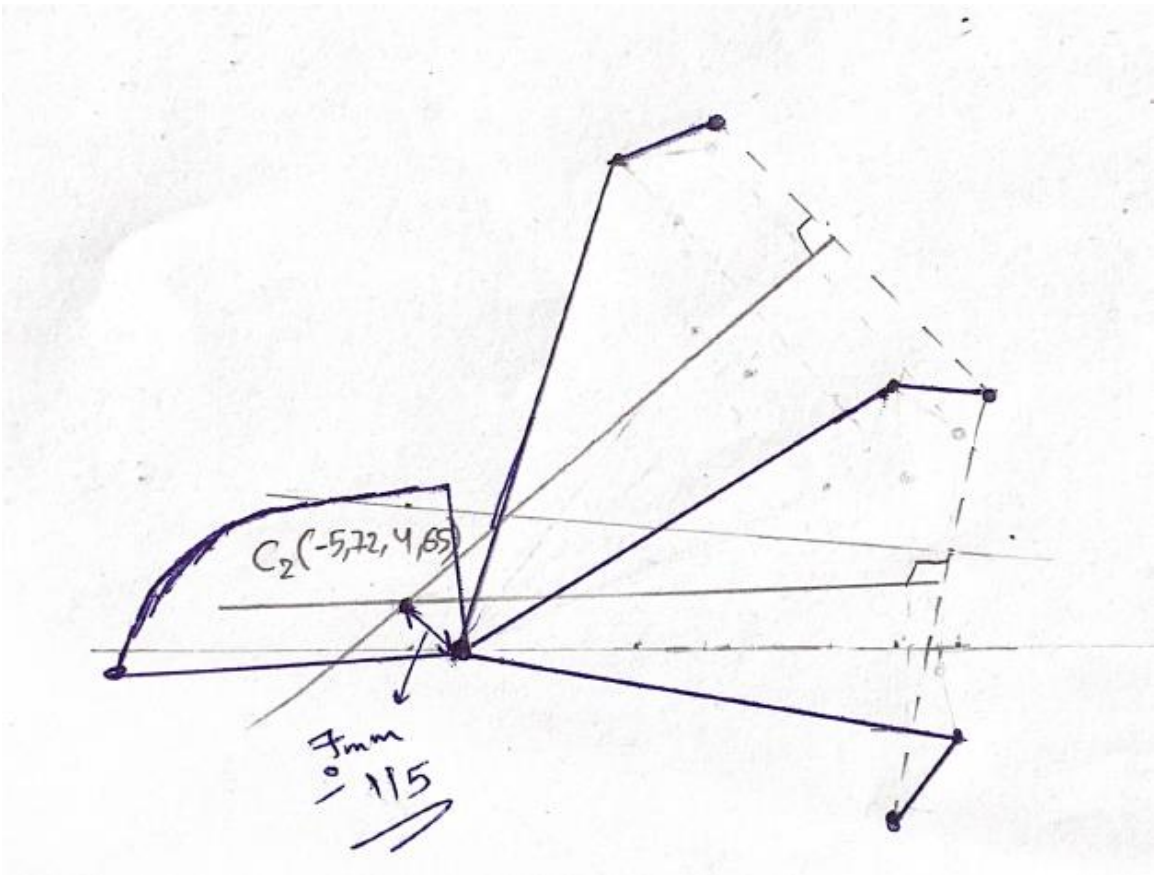

2.8 Motion Transfer Explanation

Motion transfer occurs sequentially through the mechanism:

1. Rotation of Phalanx 1 around the base joint drives the first linkage.
2. The first linkage constrains the motion of Phalanx 2 according to the synthesized geometry.
3. As Phalanx 2 moves, the coupling point near the PIP joint moves along a defined trajectory.
4. This trajectory drives the second linkage system.
5. The second linkage converts this motion into rotation of Phalanx 3 around the DIP joint.

This creates coordinated finger flexion similar to biological fingers.

2.9 Final Design Parameters

Phalanx Lengths

- L1 = 50 mm
- L2 = 30 mm
- L3 = 20 mm

Linkage System 1

Coupler point on Phalanx 2: (11 mm , 40°)

Fixed pivot: (1.54 , -7.36)

Link length: 52.32 mm

Linkage System 2

Coupling point: (7 mm , -115°)

Equivalent point on Phalanx 3: (7.37 mm , 141°)

Link length: 29.64 mm

Coupler point selection criteria

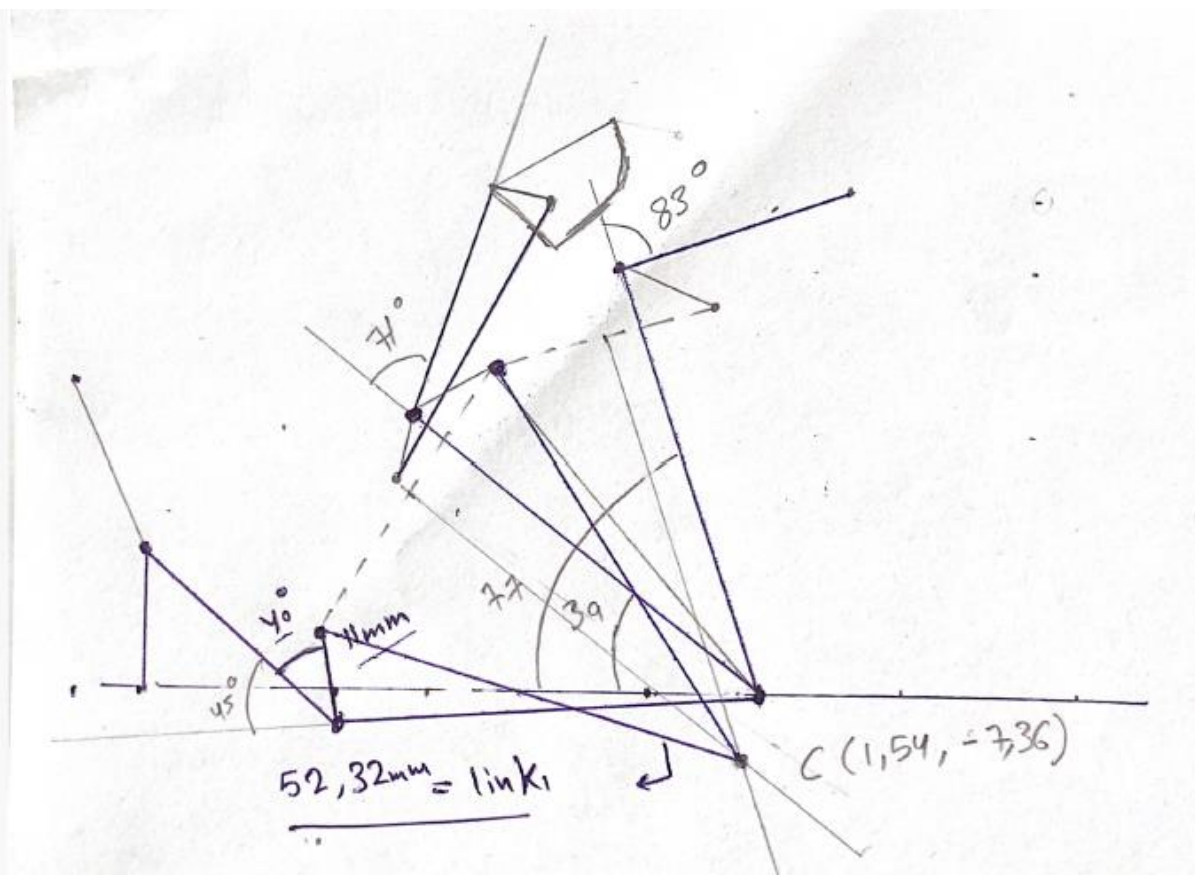

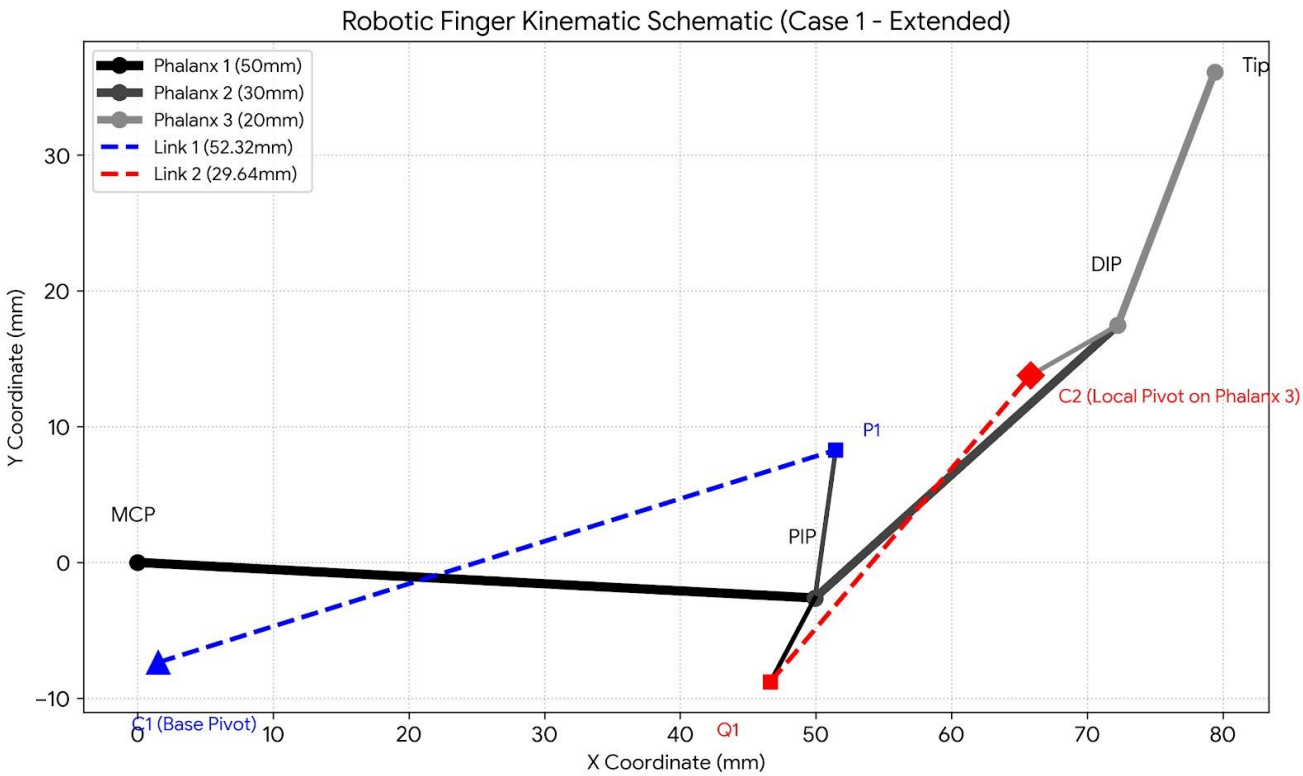
Robotic Finger Kinematic Schematic (Case 1 - Extended)
Phalanx 1 (50mm)
Phalanx 2 (30mm)
Phalanx 3 (20mm)
Link 1 (52.32mm)
Link 2 (29.64mm)
Tip
DIP
C2 (Local Pivot on Phalanx 3)
P1
MCP
PIP
C1 (Base Pivot)
Q1
Y Coordinate (mm)
X Coordinate (mm)

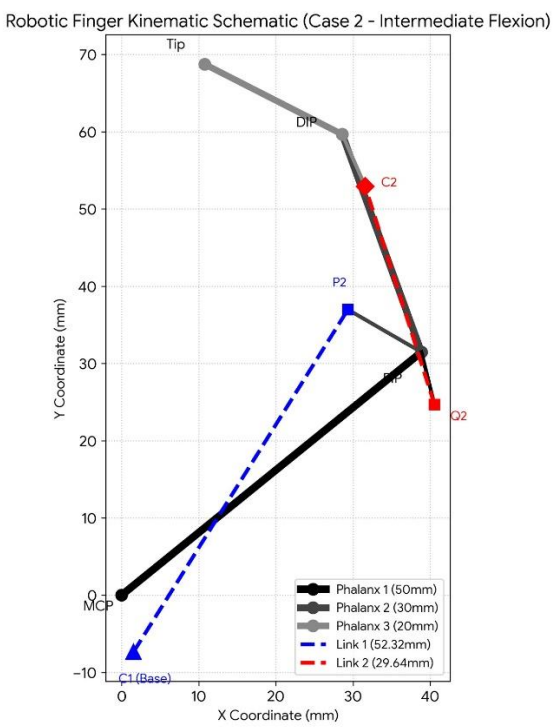
Robotic Finger Kinematic Schematic (Case 2 - Intermediate Flexion)
Tip
DIP
C2
P2
PIP
Q2
MCP
C1 (Base)
Phalanx 1 (50mm)
Phalanx 2 (30mm)
Phalanx 3 (20mm)
Link 1 (52.32mm)
Link 2 (29.64mm)
Y Coordinate (mm)
X Coordinate (mm)

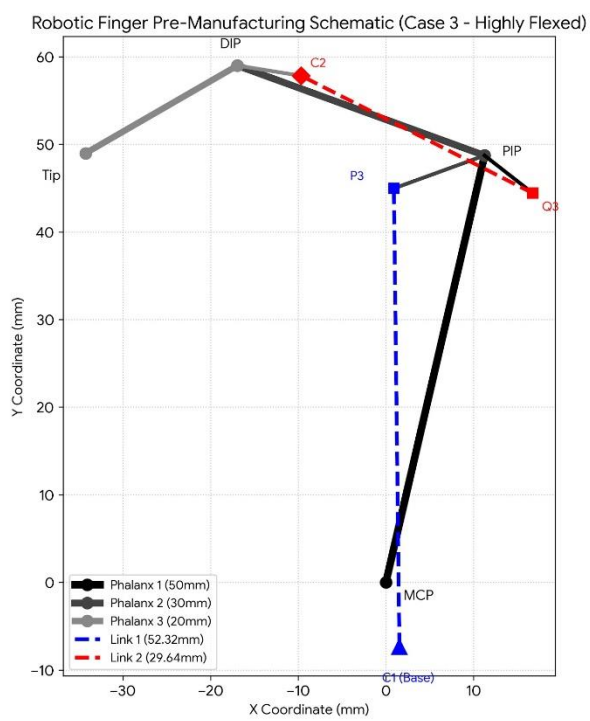
Robotic Finger Pre-Manufacturing Schematic (Case 3 - Highly Flexed)
DIP
C2
PIP
Tip
P3
Q3
MCP
C1 (Base)
Phalanx 1 (50mm)
Phalanx 2 (30mm)
Phalanx 3 (20mm)
Link 1 (52.32mm)
Link 2 (29.64mm)
Y Coordinate (mm)
X Coordinate (mm)

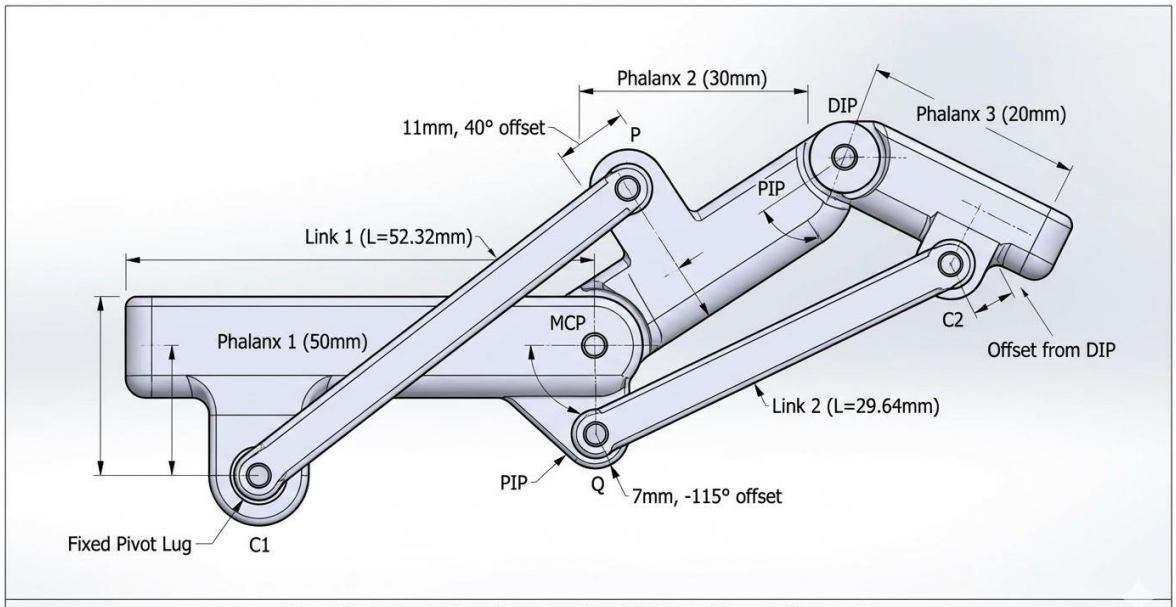

Pre-Manufacturing Schematic - Robotic Finger Assembly

The coupler points were selected based on three design criteria:

- Normalized distance along the phalanx
  $0.3L \leq d \leq 0.5L0$
- Angular placement
  The point is placed between
  $30^\circ - 60^\circ$
  relative to the phalanx axis to ensure adequate moment arm.
- Geometric scaling
  The dimensions from the reference design were scaled according to the ratio of phalanx lengths between the reference design and the current robotic finger

• Design and study a gearbox:

3.1.1 Important Note Regarding the Report Content

This report includes detailed engineering calculations, numerical compensations, design assumptions, phased verification, and sensitivity and uncertainty analysis.

3.1.2 Study Objective

The objective is to design a gearbox integrated into the base of the robotic finger to provide two operating modes:

- Speed Mode: for rapid finger closure before contact with the object.
- Force Mode: for increased torque after contact and improved gripping force.
- Switching between the two modes is achieved via a sliding dog clutch on the output shaft.

3.1.3 Basic Design Inputs Used in the Study

Parameter	Value	Note
Required output torque in the critical condition	1.9 N·m	From finger analysis in near-open configuration
Gear type	Spur gears	For manufacturing and analysis simplicity
Pressure angle	20°	Standard value
Initial module	0.5 mm	For compact size
Target static safety factor	2	Required by design
System arrangement	Motor → Gears → Dog Clutch → Output Shaft → Tendon Drum	Power transmission chain

3.1.4 Motor Selection

A **DC motor with an internal gearbox and encoder** was adopted as the starting design reference because it provides a good balance between size, performance, and cost.

The assumed parameters are:

Property	Value
Operating voltage	6 V
Operating speed	170 rpm
Rated torque	0.196 N·m
Approximate dimensions	52 × 24 mm
Approximate mass	96 g

Important note:
These values represent a **design baseline**. If the motor is changed later, the reduction ratios can easily be recalculated because all equations are written first in symbolic form and then numerically evaluated.

3.1.5 Derivation of Required Reduction Ratios

Approximate efficiencies were assumed as:

- Speed path (one gear pair + dog clutch)
  $\eta_s \approx 0.90 \times 0.95 = 0.855$
- Force path (two gear pairs + dog clutch)
  $\eta_f \approx 0.90 \times 0.90 \times 0.95 = 0.77$

The basic relationship between motor torque and output torque is

$$T_{out} = \eta \times i \times T_m$$

Where:

- T_{out} = output torque
- η = total efficiency
- i = reduction ratio
- T_m = motor torque

In **Force Mode**, we must achieve at least the required torque.

This satisfies the requirement of the project:
in force mode the system reaches approximately **1.94 N·m**, slightly higher than the required **1.9 N·m**.

The minimum required reduction ratio becomes

$i_{force,min} = T_{out,req}/(\eta_{force} \times T_m)$
$i_{force,min} = 1.9/0.77 \times 0.196$
$\mathbf{i_{force,min} = 12.58 \approx 12.6}$

Therefore the selected ratio is

$\mathbf{i_{force} = 12.83}$

For **Speed Mode**, the ratio must be much smaller to obtain a higher output speed.

Selected value:

$\mathbf{i_{speed} = 3.0}$

This provides clear separation between the functions of the two modes.

3.1.6 Performance Summary

Speed Mode

$T_{out,s} = 0.196 \times 3.0 \times 0.855 = 0.503 N \cdot m$
$n_{out,s} = 170/3 = 56.7 rpm$

Force Mode

$T_{out,f} = 0.196 \times 12.83 \times 0.77 = 1.94 N \cdot m$
$n_{out,f} = 170/12.83 = 13.3 rpm$

Important result:

The force mode produces **1.94 N·m**, which is slightly higher than the required **1.9 N·m**, providing a small acceptable safety margin.

3.2.1 Gear Tooth Selection and Ratio Implementation

Speed Path

Single gear pair:

Pinion
$z_1 = 20$

Gear
$z_2 = 60$

$i_s = 60/20 = 3.0$

Force Path

Two-stage compound reduction:

Stage 1
$z_1 = 20 \rightarrow z_3 = 70$

$i_{f1} = 70/20 = 3.5$

Stage 2
Pinion on intermediate shaft
$z_4 = 18$

Output gear
$z_5 = 66$

$i_{f2} = 66/18 = 3.667$

Total force ratio:

$i_f = 3.5 \times 3.667 = 12.83$

This configuration matches the intended concept:

The motor rotates continuously, the gears remain in mesh, and the **dog clutch locks either the speed gear or the force gear to the output shaft**.

3.2.2 Preliminary Gear Geometry

Module m=0.5mm
Pressure angle =20°

Pitch diameters:

d=m×zd

Gear	z	Pitch diameter
Gear 1	20	10 mm
Gear 2	60	30 mm
Gear 3	70	35 mm
Gear 4	18	9 mm
Gear 5	66	33 mm

Center distances:

- Velocity path: (10+30)/2=20mm
- First stage of torque path: (10+35)/2=22.5mm
- Second stage: (9+33)/2=21mm

These values are compact and suitable for integration inside the **base of a robotic finger rather than an industrial gearbox**.

The following arrangement was proposed:

path	Stage	Number of teeth pinion	Number of teeth gear	i
speed	One stage	20	60	3.0
Torque	Stage1	20	70	3.5
Torque	Stage2	18	66	3.667

3.2.3 Gear Force Calculations

Equations used:

$Ft=2T/d$
$Fr=Ft\tan(\phi)$

With
$\tan(20°)\approx 0.364$

First Mesh (Force Path)

- Input torque : $Tin=0.196\ N\cdot m$
- Pitch diameter : $d1=10\ mm$
- Tangential force : $Ft1=39.2\ N$
- Radial force : $Fr1=14.3\ N$

Torque on Intermediate Shaft

$Tint=Tin\times i1\times\eta$
$Tint=0.196\times 3.5\times 0.90$
$Tint=0.617N\cdot m$

Second Mesh (Force Path)

- $d4=9\ mm=0.009\ m$
- $Ft2=137.1N$
- $Fr2=49.9N$

The **second mesh in force mode is the most critical mesh**.

3.2.4 Gear Tooth Bending Check (Lewis Equation)

$\sigma b = Ft/(b \times m \times Y)$

Critical pinion
$z = 18$
$Y \approx 0.31$

Face width	Stress
5 mm	176.9 MPa
8 mm	110.6 MPa
10 mm	88.5 MPa

Conclusion:

5 mm is relatively small
10 mm is excellent but increases gearbox size

Selected compromise:

b=8

3.2.5 Initial Contact Stress Check

I won't go into full AGMA now, but from an engineering perspective:

- When Lewis bending is acceptable at b=8mm
- With loads here only around 137 N on the most critical mesh

And with the use of small steel gears or a brass/steel combination, contact stress is unlikely to be the first failure; more likely, the most important factors are:

1. Pinion bending
2. Shaft stiffness
3. Dog clutch shock.

Therefore, at this stage, we consider:

- The initial gear design acceptable bending-wise at b=8mm
- and postpone the detailed AGMA contact test until after the final material is installed.

3.3.1 Shaft Design (Bending + Torsion)

Equivalent torque:

$T_e = \sqrt{(M^2 + T^2)}$

Shear stress : $\tau = 16Te/\pi d3$

Allowable shear stress assumed : $\tau allow = 40$ MPa

1-) Input Shaft

carries:

- A relatively small torque T=0.196 N·m
- and the first mesh force Ft=39 N and Fr=14 N

Assuming the distance between two bearings is approximately:

L=16 mm

And taking a gear approximately in the middle, the maximum bending moment is approximately:

$M_t = F_t L / 4 = 39.2 \times 16 / 4 = 156.8$ N·mm
$M_r = F_r L / 4 = 14.3 \times 16 / 4 = 57.2$ N·mm
$M = \sqrt{(156.8^2 + 57.2^2)} = 166.9$ N·mm
T = 0.196 N·m = 196 N·mm

equivalent twisting moment:

$T_e = \sqrt{(166.9^2 + 196^2)} = 257.4$ N·mm

If we take the allowable shear stress for the small solid metal:

$\tau allow = 40$ MPa

Therefore:

$d^3 = 16 \times 257.4 / (\pi \times 40) = 32.8$

d = 3.2 mm

A slightly higher practical diameter was adopted:

$d_{in} = 4$ mm

Very convenient and practically safe.

2-) Intermediate Shaft

This is the most dangerous because it carries:

- Second-stage torque T=617N·mm
- Relatively large forces

$F_{t,total} = 39.2 + 137.1 = 176.3$ N

$F_{r,total} = 14.3 + 49.9 = 64.2$ N

bearing span:

L = 20 mm

Therefore:

$M_t = 176.3 \times 20 / 4 = 881.5$ N·mm
$M_r = 64.2 \times 20 / 4 = 321.0$ N·mm
$M = \sqrt{(881.5^2 + 321.0^2)} = 938.2$ N·mm
T = 0.617 N·m = 617 N·mm

$T_e = \sqrt{(938.2^2 + 617^2)} = 1122.9$ N·mm

$d^3 = 16 \times 1122.9 / (\pi \times 40) = 143.0$

d = 5.2 mm

Approved:

$d_{int} = 6$ mm

This is also excellent because it is close to the pin sizes you have in your finger joints, and therefore does not look strange in terms of the overall size of the project.

3-)Output Shaft

The output shaft carries the ultimate torque:

$T_{out} = 1.94\ N\cdot m = 1940\ N\cdot mm$

And with a dog clutch + drum, it will also have bending.

Assuming conservative bending:

$M \approx 500\ N\cdot mm$

Therefore:

$T_e = \sqrt{(1940^2 + 500^2)} = 2003\ N\cdot mm$

$d^3 = 16\times2003 / (\pi\times40) = 255.0$

$d = 6.34\ mm$

Approved:

$d_{out} = 8\ mm$

This makes perfect sense because:

- It has a dog clutch
- It has system output
- It has maximum torque

3.3.4 Final Shaft Diameters

- Input shaf : 4 mm
- Intermediate shaft : 6 mm
- Output shaft : 8 mm

3.4Clutch design

3.4.1 What exactly is the function of a dog clutch?

In a transmission, there are two paths:

- Speed mode for fast movement
- Force mode for high torque. However, these two paths cannot be operated simultaneously.

Therefore, the function of a dog clutch is:

- To ensure the hub is always connected to the output shaft
- To have an axially sliding sleeve
- When the transmission is in motion, the teeth of the dog clutch engage with the required gear sockets
- This locks the gear to the shaft while the other gear remains free to rotate. This means it doesn't rely on friction like a friction clutch, but rather on positive mechanical locking.

Because:

- It is small in size
- The torque is not very large
- A clear switching between speed and torque modes is required

3.4.2 What torque should a dog clutch withstand?

From your finger analysis:

- The critical near-open state
- The gearbox should provide approximately 1.9 N·m at the output.

In previous calculations, we approximately arrived at:

Tout ≈ 1.94 N/cdotpm

However, we don't design the dog clutch solely at its nominal value because the engagement involves:

- Shock
- Improper load distribution
- The possibility of not all teeth engaging equally

Since the coil itself requires a minimum safety factor of 2, a good design value would be:

Tclutch, design = 2 × 1.94 = 3.88 N/cdotpm

This is rounded to:

Tclutch, design = 4 N/cdotpm

This is an excellent figure for analysis.

3.4.3 Choosing the Initial Dog Clutch Shape

Since your gearbox is small and centrally located on the output shaft, the best initial options are:

- 4 dogs
- Quadruple symmetry
- Axial sliding sleeve
- Dog faces with a simple chamfer for easier entry
- Central hub on the output shaft
- Gear pockets on either side of the sleeve or on the two gears themselves

Reason for choosing 4 dogs:

- Simpler to manufacture than 6 or 8 dogs
- Provides good balance
- Suitable for the shaft size we chose (8mm)
- Very easy to draw

3.4.4 Suitable Initial Dimensions for the Dog Clutch

Since our initial output shaft is:

dout=8 mm

Let's take realistic initial dimensions:

- Hub inner diameter = 8 mm
- Hub outer diameter/sleeve approximately = 14 to 16 mm
- Average torque transmission radius:

R m≈ 8 mm

- Number of teeth : N=4
- Axial tooth width : b=2.5 mm
- Peripheral tooth thickness : t=3 mm
- Effective engagement depth : h=2.5 mm

These dimensions make perfect sense with a small gearbox inside the base of the finger.

3.4.5 The peripheral force transmitted by the dog clutch

The basic relationship:

T=Ft ×rm

Therefore :

Ft=T/rm

Using the design torque:

T=4 N\cdotpm

rm=8 mm=0.008 m

We get:

Ft=40.008=500 N

Therefore, the total peripheral force that the clutch must transmit is:

Ft=500 N

3.4.6How is the load distributed across the dogs?

Here's a very important point in any clutch design:

Don't assume that all teeth share the load equally.

Even though you have 4 dogs, in reality, due to:

- clearances
- manufacturing tolerance
- slight misalignment, the initial load is often only distributed across two dogs.

So, let's consider :neff=2

Therefore, the power over every dog is effective:

Fdog=500/2=250 N

This is a conservative and excellent hypothesis in the report.

3.4.7 Surface pressure testing (Bearing/Crushing) on the dog face

Load area per dog:

Ab=b×h
Ab=2.5×2.5=6.25 mm2

Therefore, surface loading stress:

σb=Fdog/Ab=250/6.25=40 MPa

Therefore :

σbearing≈40 MP

This is a very good figure if the dog clutch is made of:

- steel
- or even simple hardened steel/alloy steel. It's generally quite acceptable.

3.4.8 Examination of the sternum on the dog

Now we examine the tooth itself on the sternum.

Approximate sternum area:$As=t\times b$

$As=3\times 2.5=7.5$ mm2

Shear stress: $\tau=Fdog/As=250/7.5=33.3$ MPa

Therefore :

$\tau dog\approx 33$ MPa

This is also a very good starting point for a suitable metallic material.

3.4.9 What does this result mean in practice?

- This result is excellent because it means:
- The dog clutch, with the initial dimensions chosen, is capable of withstanding the design torque.
- The compression and shear are not dangerously high.
- Therefore, the dog itself is not usually the first point of weakness.

Rather, the real danger lies in:

- Engagement shock
- Speed difference between the two parts
- Poor timing during engagement.

This s very important because it guides us to the next correct design point.

3.4.10 Axial Engagement Force

To ensure smooth dog clutch engagement, we often add a lead-in chamfer at the edges. Assume an approximate chamfer angle:

$\alpha=15\circ$

When a peripheral load is present, an axial component arises that is related to the angle of the surface. Approximately:

$Fa=Ft\tan\alpha$

Using the nominal power during normal operation at the output, and not the full safety torque, we take:

$Ft=1.94/0.008=242.5$ N

e: Therefor

$Fa=242.5\tan 15^{\circ}$
$Fa=242.5\times 0.268\approx 65$ N

Therefore, the axial force resulting from the inclined surface can reach approximately:

$Fa\approx 65$ N

This is a very important result.

What does it mean?

It means that:

If you attempt to engage under a high load, you will need considerable shifting force.

This may result in:

- Difficulty engaging
- Rebound
- Shock
- Rapid edge wear

Conclusion: Engaging should occur under a low load or after reducing speed to minimize shock.

3.4.11 Sleeve Length and Travel Distance

Because you have two positions, the sliding sleeve needs three:

- Engaged with the speed gear
- Neutral
- Engaged with the torque gear

Therefore, the axial travel distance should be approximately:$s\approx h+c$

Where :

- h Interlocking depth
- c clearance safety

If we take :

- h=2.5 mm
- clearance = 0.5 mm

The journey is one-way: s=3 mm

So from the center outwards in every direction:

$s \approx 3$ mm

The overall journey between the two situations:

$s_{total} \approx 6$ mm

This is an excellent, small, and suitable number within a small housing.

3.4.12 Clearances and Manufacturing

Because the project has a condition:

- low backlash
- smooth engagement
- practical assembly

The following instructions should be followed:

- Radial fit: Slightly sliding between the sleeve and hub
- Small side clearance between the dogs and pockets
- Chamfer at the edges: 10 to 15∘
- Root fillet: Good for reducing stress concentration
- Do not make the tooth too sharp

3.5 Bearing Study

3.5.1 How many bearings are there per shaft?

The correct order in this gearbox is:

- Input shaft: 2
- Intermediate shaft: 2
- Output shaft: 2

So, the total number of bearings is:

6 bearings

Reason:

- Each shaft carries gear forces
- You must prevent tilting and swerving
- The dog clutch on the output shaft requires precise alignment
- Having only one bearing per shaft is not mechanically sufficient

---

3.5.2 Input shaft bearings

On the input shaft, we had the first mesh:

- Ft=39.2N
- Fr=14.3N

If the gear is positioned between two bearings approximately in the middle, then each bearing carries half the load in each direction:

Rt=39.22=19.6 N
Rr=14.32=7.15 N

The result on each bearing:

R=19.62+7.152≈20.9N

Therefore:

Each bearing on the input shaft carries approximately 21 N

3.5.3 Intermediate shaft bearings

This shaft carries:

- The gear from the first stage
- The pinion from the second stage. Therefore, it carries the combined loads of mesh 1 and mesh 2. We have:

From mesh 1

- Ft1=39.2N
- Fr1=14.3N

From mesh 2

- Ft2=137.1N
- Fr2=49.9N

Approximate total:

Ft,total=39.2+137.1=176.3N
Fr,total=14.3+49.9=64.2 N

Assuming an initial convergent distribution between two bearings:

Rt=176.3/2=88.15 N
Rr=64.2/2=32.1 N

The result on each bearing:

R=88.152+32.12≈93.8 N

Therefore:

Each bearing on the intermediate shaft carries approximately 94 N

3.5.4 Output shaft bearings

On the output shaft, you have the final gear load from force mode:

Ft=137.1N
Fr=49.9N

If we consider only the load of the gear:

Rt=68.55 N
Rr=24.95 N

The result:

R=68.552+24.952≈72.9 N

Therefore:

Each bearing on the output shaft carries approximately 73 N.

3.5.5 Which shaft is the most sensitive?

The most accurate answer from an engineering perspective is:

From a gear loading perspective only, the most sensitive is the intermediate shaft because it:

- Carries the first and second meshes
- Experiences the highest bending force from the gears
- Has a small pinion in the second stage, which is the most critical gearing element.

However, from the perspective of the entire system, if we consider:

- Gear load
- Dog clutch
- Tendon drum load
- Highest torque, then the most sensitive shaft becomes the output shaft because it:
- Carries the highest torque
- Has a dog clutch
- Has the tendon tension
- Any misalignment directly affects the engagement and tendon tension.

3.5.6 Should we use flanged miniature bearings or plain bushings?

My final choice for this project is:

Flanged miniature ball bearings, not plain bushings.

Why?

Because the project system includes:

- Spur gears
- Dog clutch
- Small shafts
- The need for good alignment
- Low backlash
- Low friction
- Smooth shifting. Plain bushings have the following drawbacks:
- Higher friction
- Faster wear
- Lower axial accuracy and angle
- Higher probability of shaft play
- Negatively affects dog clutch engagement. Flanged miniature bearings offer:
- Easier axial mounting within the housing
- Better alignment
- Less friction
- Smoother rotation
- Very suitable for compact gearboxes

3.5.7 Proposed Final Distribution

Input shaft

- 2 flanged miniature ball bearings
- Because the load is relatively small, but precision is required

Intermediate shaft

- 2 flanged miniature ball bearings
- Because it carries the highest actual gear reaction

Output shaft

2 flanged miniature ball bearings

This is almost mandatory due to:

- dog clutch
- tendon drum
- higher torque
- the need for excellent alignment

3.6 Sensitivity and uncertainty analysis

Engineering sensitivity analysis was adopted instead of purely statistical probability calculations.

3.6.1 Sensitivity of output torque to changes in motor torque

If the engine torque changes by ±10%:

$T_{m,low} = 0.176$ N·m
$T_{m,high} = 0.216$ N·m

$T_{out,low} = 0.77 \times 12.83 \times 0.176 = 1.74$ N·m
$T_{out,high} = 0.77 \times 12.83 \times 0.216 = 2.13$ N·m

Result: The design is relatively sensitive to motor torque; any significant drop in motor torque may cause the output to fall below 1.9 N·m.

3.6.2 Sensitivity of output torque to efficiency

$\eta_{low} = 0.72$, $\eta_{high} = 0.82$

$T_{out}(\eta_{low}) = 0.72 \times 12.83 \times 0.196 = 1.81$ N·m

$T_{out}(\eta_{high}) = 0.82 \times 12.83 \times 0.196 = 2.06$ N·m

Conclusion: Mechanical losses are significant, so attention must be paid to lubrication, manufacturing precision, and bearing quality.

3.6.3 Stress sensitivity of gear face width

$\sigma_b \propto 1/b$

Therefore, increasing b from 5 mm to 8 mm reduced the stress from 176.9 MPa to 110.6 MPa, a reduction of approximately 37.5%.

Conclusion: Face width is one of the most influential variables and an effective design tool before resorting to increasing the module.

• Gearbox Architecture & Power Transmission

The gearbox design relies on a compact spatial architecture to minimize the occupied space within the robotic finger's base. The system consists of three parallel shafts, all supported by a total of six flanged miniature ball bearings (two bearings per shaft) to ensure high precision, minimize friction, and maintain accurate gear alignment during operation .

The mechanism for coupling the shafts and gears, as well as transmitting power, is achieved through two separate kinematic paths (a speed path and a force path), following this mechanical arrangement :

4.1 Shafts and Gears Layout:

- **Input Shaft:** With a diameter of 4 mm, it is directly connected to the motor and rotates continuously. Two gears are permanently fixed to it to act as the primary motion sources: the speed path input pinion ($z_1=20$) and the force path input pinion ($z_3=20$) .
- **Intermediate Shaft:** With a diameter of 6 mm, it is used exclusively for the force path. This shaft receives motion from the input shaft via a larger gear ($z_4=70$), and transmits it—after amplifying the torque—through a smaller pinion mounted on it ($z_5=18$).
- **Output Shaft:** With a diameter of 8 mm, it carries the two final gears: the speed path gear ($z_2=60$) and the force path gear ($z_6=66$). The core feature of this design is that these two gears are **free-spinning** around the output shaft; meaning they do not directly transmit motion to it in the neutral position.

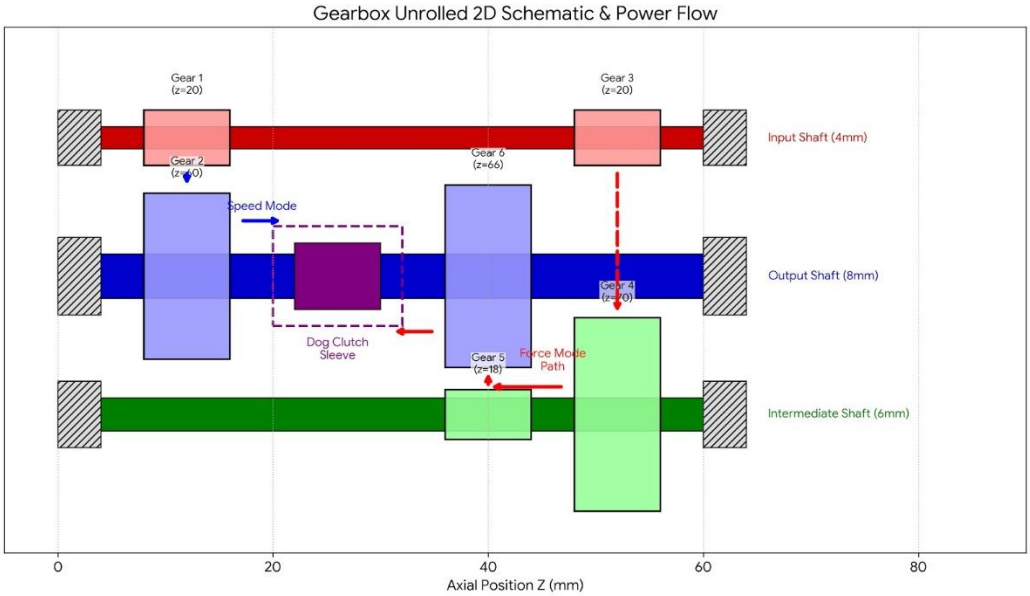
Gearbox Unrolled 2D Schematic & Power Flow
Gear 1
(z=20)
Gear 3
(z=20)
Input Shaft (4mm)
Gear 2
(z=70)
Gear 6
(z=66)
Speed Mode
Output Shaft (8mm)
Gear 4
(z=70)
Dog Clutch
Sleeve
Gear 5
(z=18)
Force Mode
Path
Intermediate Shaft (6mm)
0
20
40
60
80
Axial Position Z (mm)

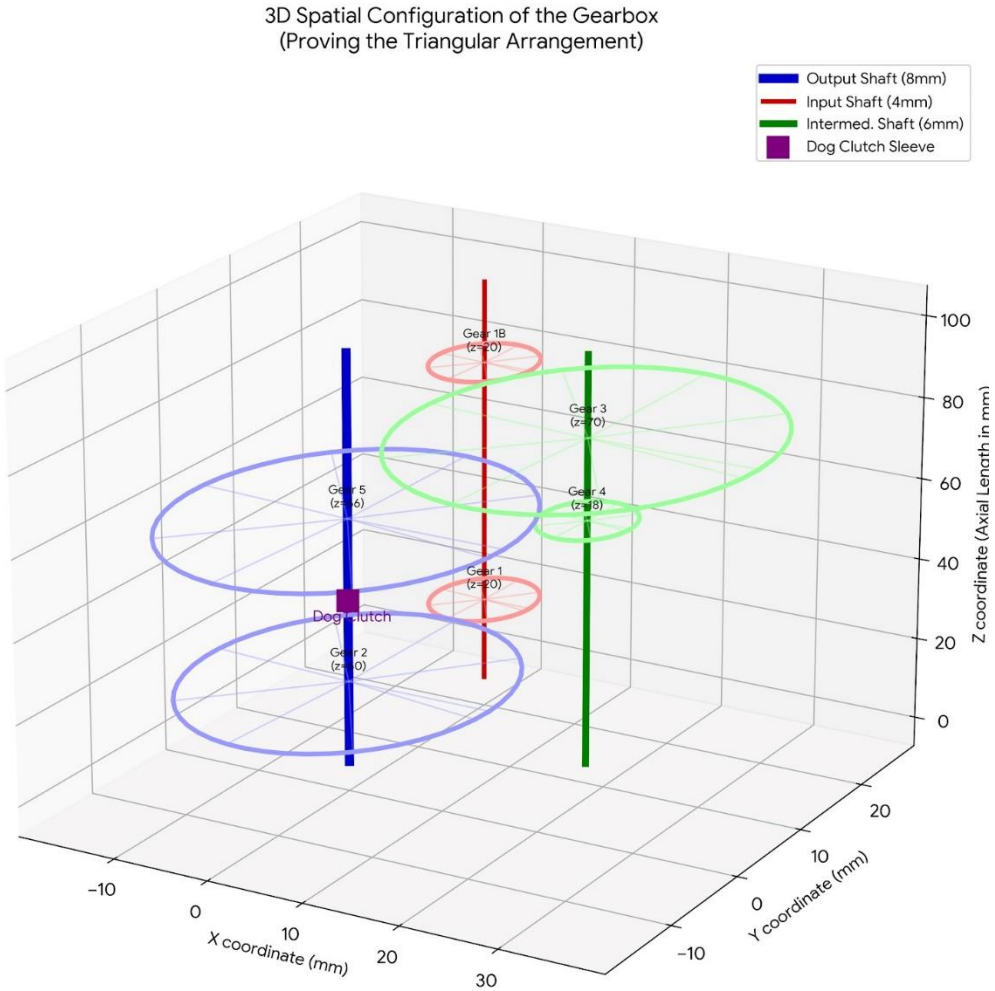
3D Spatial Configuration of the Gearbox
(Proving the Triangular Arrangement)
Output Shaft (8mm)
Input Shaft (4mm)
Intermed. Shaft (6mm)
Dog Clutch Sleeve
Gear 1B
(z=20)
Gear 3
(z=70)
Gear 5
(z=66)
Gear 4
(z=18)
Gear 1
(z=20)
Dog Clutch
Gear 2
(z=70)
100
80
60
40
20
0
Z coordinate (Axial Length in mm)
−10
0
10
20
30
X coordinate (mm)
20
10
0
−10
Y coordinate (mm)

4.2 Dog Clutch Mechanism and Path Selection

To couple the motion from the free-spinning gears to the output shaft, a compact 4-dog clutch is employed, centered between the two final gears . The clutch consists of a hub that is mechanically fixed to the output shaft, and a sliding sleeve that moves axially along the shaft .

- **In Speed Mode:** The sleeve slides axially to positively mechanically lock its teeth with the recesses of the speed gear ($z=60$) . This locks the gear to the output shaft, transmitting rotation at a speed of 56.7 rpm for rapid finger closure.
- **In Force Mode:** Upon contact with an object, the sleeve slides in the opposite direction to engage with the force gear ($z=66$) . This disengages the speed path and transmits a high torque of approximately 1.94 N·m to ensure a firm gripping force .

• Gearbox–Finger Mechanical Coupling

5.1 System Integration Concept

To simplify the mechanical architecture of the robotic finger, the gearbox output shaft is directly coupled to the first phalanx of the finger. This design eliminates the need for a tendon transmission system and allows the actuator to drive the finger mechanism through direct rotational motion.

The gearbox is mounted at the base of the finger structure. The output shaft of the gearbox is oriented perpendicular to the first phalanx and aligned with the rotational axis of the base joint.

This configuration allows the gearbox output shaft to act simultaneously as:

- the **actuation shaft**, transmitting torque from the gearbox
- the **rotational joint axis** of the first phalanx

As a result, when the gearbox output shaft rotates, the first phalanx rotates around the base joint.

5.2 Mechanical Coupling Method

The mechanical connection between the gearbox output shaft and the first phalanx is achieved through a rigid coupling element.

The output shaft is inserted into a cylindrical hub mounted on the first phalanx. The hub is fixed to the shaft using a set screw or bolt, ensuring reliable torque transmission between the shaft and the finger segment.

The hub itself is attached to the first phalanx using small mounting screws. This arrangement allows secure mechanical coupling while maintaining ease of assembly and disassembly.

The selected diameter of the gearbox output shaft is:

d = 8 mm

which provides sufficient torsional strength to transmit the required actuation torque.

5.3 Motion Transmission Through the Finger

The motion transfer within the robotic finger occurs sequentially through the mechanism.

1. The motor generates rotational motion.
2. The gearbox modifies the speed and torque according to the selected gear ratio.
3. The gearbox output shaft rotates.
4. The output shaft rotates the first phalanx directly around the base joint.
5. The motion of the first phalanx drives the first four-bar linkage.
6. The first linkage constrains the motion of the second phalanx.

5.4 Advantages of the Direct Coupling Design

The direct coupling between the gearbox output shaft and the first phalanx offers several advantages for the robotic finger design:

- **Mechanical simplicity**, since no tendon or pulley system is required.
- **Improved structural rigidity** due to direct torque transmission.
- **Reduced mechanical losses** compared to tendon-driven mechanisms.
- **Ease of assembly and maintenance**, which is beneficial for educational and experimental purposes.

Additionally, this configuration allows the gearbox to be easily integrated into the base of the finger while maintaining a compact mechanical structure.

• CAD Design and Motion Analysis

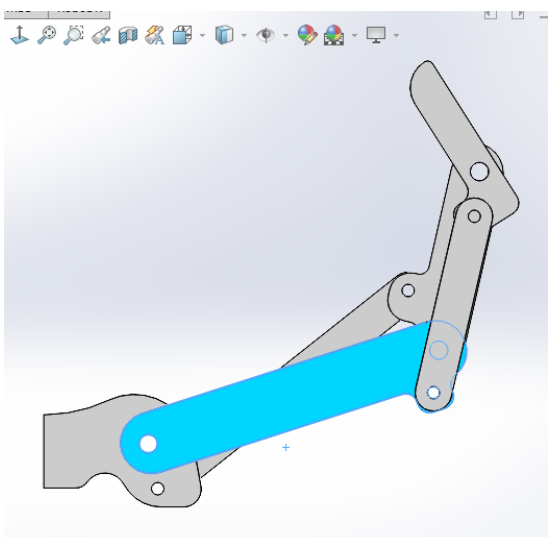

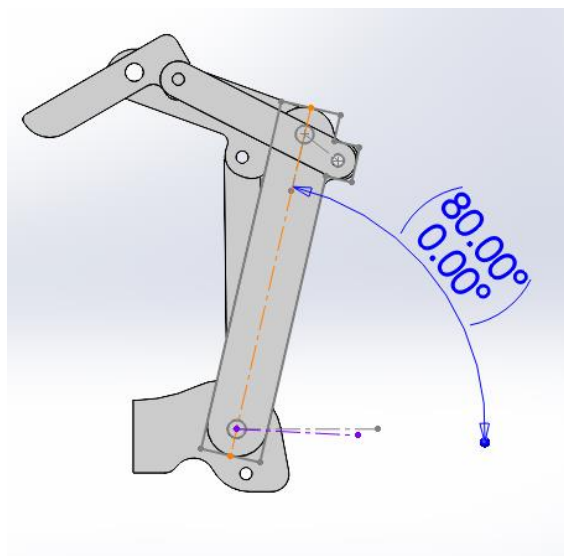

6.1 CAD Modeling of the Robotic Finger

The robotic finger mechanism was modeled using SolidWorks based on the kinematic synthesis results obtained in the previous section. The design consists of three rigid phalanges connected through revolute joints, forming a multi-link mechanism that enables coordinated finger motion.

The phalanges were defined with the following lengths:

- Phalanx 1: 50 mm
- Phalanx 2: 30 mm
- Phalanx 3: 20 mm

Two linkage elements were incorporated to control the motion:

- Link 1: 52.32 mm
- Link 2: 29.64 mm

Key pivot points, including the base pivot (C1), intermediate joint (Q1), and distal connection point (C2), were positioned according to the kinematic design to ensure proper motion transmission.

All components were assembled using revolute (pin) joints implemented through concentric mates in SolidWorks, allowing rotational motion between connected parts while maintaining geometric constraints.

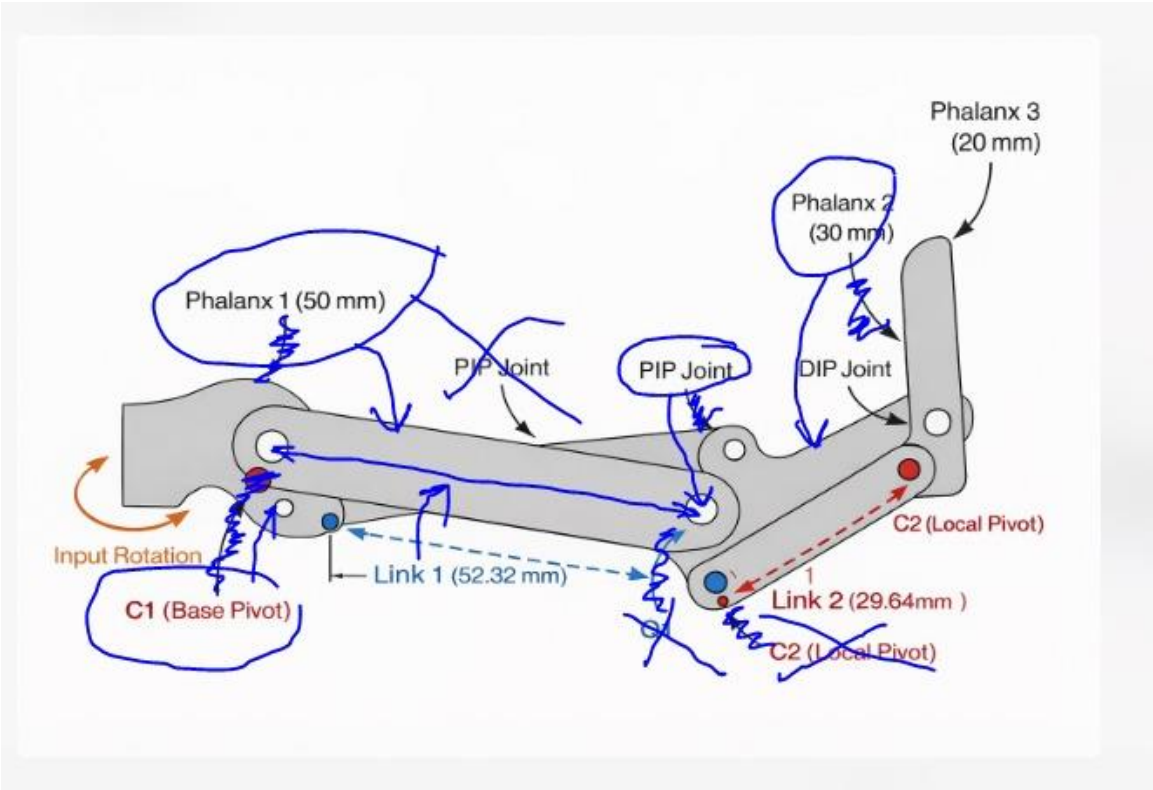

6.2 Motion Study Setup

A motion study was conducted using the SolidWorks Motion Analysis tool to evaluate the dynamic behavior of the mechanism. A rotary motor was applied at the base joint (MCP) to drive the first phalanx, representing the input actuation of the system.

The simulation was performed over a duration of 4 seconds with a constant angular input. The motion of the remaining phalanges was generated automatically through the linkage system, reflecting the coupled kinematic behavior of the mechanism.

6.3 Kinematic Results

To assess the performance of the mechanism, angular displacement, angular velocity, and angular acceleration were extracted for a selected phalanx during the simulation.

6.3.1 Angular Displacement

The angular displacement curve shows a continuous variation over time, indicating smooth rotational motion of the phalanx. A discontinuity observed near the end of the simulation corresponds to angular wrapping (±180° transition) rather than a physical instability in the mechanism.

6.3.2 Angular Velocity

The angular velocity profile demonstrates a gradual increase followed by a smooth decrease, indicating stable motion transmission without abrupt changes. This behavior confirms that the mechanism does not experience sudden jerks or irregular motion during operation.

6.3.3 Angular Acceleration

The acceleration curve exhibits a single peak during the transition phase, corresponding to the rapid change in motion as the finger flexes. However, no excessive spikes or oscillations are observed, which indicates that the system operates within acceptable dynamic limits.

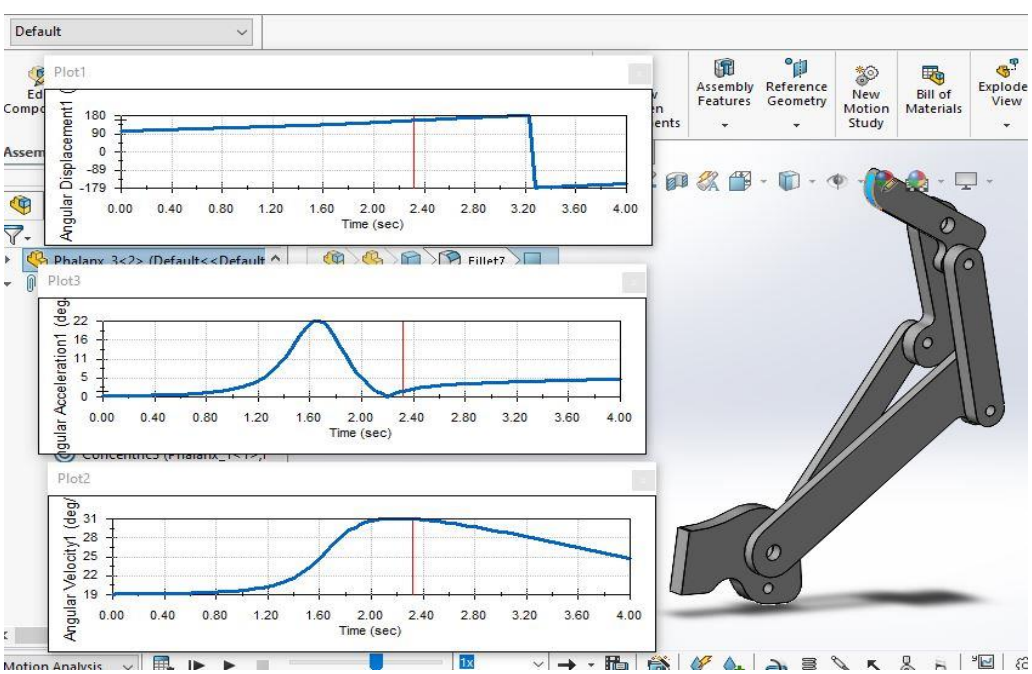

6.4 Motion Smoothness Evaluation

The obtained results confirm that the robotic finger mechanism achieves smooth and coordinated motion. The absence of discontinuities in velocity and the controlled behavior of acceleration indicate that the linkage design successfully synchronizes the movement of all phalanges.

Additionally, the simulation visually confirms that the mechanism transitions between extended and flexed configurations without mechanical interference or instability.

6.5 Conclusion

The SolidWorks CAD model accurately represents the kinematic design of the robotic finger. The motion analysis results validate the effectiveness of the linkage system in producing smooth, coordinated motion. Therefore, the proposed design is suitable for further development and potential implementation in robotic applications.

The CAD-based motion analysis confirmed that the motion is smooth, with continuous angular displacement and no abrupt changes in velocity or acceleration. This indicates good dynamic behavior. However, the simulation assumes ideal joints without friction, clearance, or backlash. In a real system, these factors may introduce deviations from the predicted motion and reduce overall accuracy.

• Gearbox CAD Design

7.1 Design Objective

The primary objective of the gearbox design is to transmit motion from the actuator to the robotic finger while achieving the required torque and speed characteristics. The gearbox was designed to provide a compact, efficient transmission system that fits within the spatial constraints of the overall mechanism.

7.2 Overall Configuration

The developed gearbox consists of three shafts and a set of five gears arranged to achieve the desired transmission ratio. The gear distribution across the shafts was determined based on the theoretical design calculations, ensuring proper motion transfer between stages.

Each shaft carries one or more gears depending on its role in the transmission system. The arrangement follows a multi-stage configuration, allowing gradual modification of speed and torque through successive gear engagements.

7.3 Gear and Shaft Arrangement

The gears were positioned on their respective shafts according to the calculated center distances and gear ratios. This ensured proper meshing conditions and smooth engagement between mating gears.

The shaft layout was carefully designed to:

- Maintain accurate alignment between meshing gears
- Avoid geometric interference between components
- Ensure structural stability of the rotating elements

Additionally, the relative positioning of large and small gears was optimized to achieve a compact and balanced configuration.

7.4 Integration of Supporting Components

The gearbox assembly includes essential supporting elements such as bearings and a clutching mechanism. Bearings were incorporated to support the shafts and maintain their alignment during operation, while the clutch mechanism enables switching between operating modes.

The placement of these components was considered during the design phase to ensure:

- Proper load distribution
- Ease of assembly
- Compatibility with the overall system

7.5 CAD Modeling and Assembly Verification

The gearbox was fully modeled and assembled in SolidWorks to translate the theoretical design into a practical mechanical system. The CAD environment allowed verification of:

- Gear alignment and meshing conditions
- Shaft positioning and spacing
- Overall assembly coherence

Through the three-dimensional model, the feasibility of the design was confirmed, ensuring that all components fit together correctly without interference.

7.6 Visualization and Representation

To improve clarity and understanding of the design, multiple visualization techniques were used, including:

- Isometric assembly views
- Exploded views showing component order
- Sectional views illustrating the internal structure

These representations provide a clear insight into the internal configuration of the gearbox and facilitate better communication of the design.

7.7 Design Validation

The CAD model served as a validation step between the theoretical calculations and the physical implementation. It confirmed that:

- The designed transmission system is geometrically feasible
- The components can be assembled practically
- The overall layout satisfies the design constraints

7.8 Figure Caption

SolidWorks model of the gearbox assembly illustrating the arrangement of shafts, gears, and supporting components.

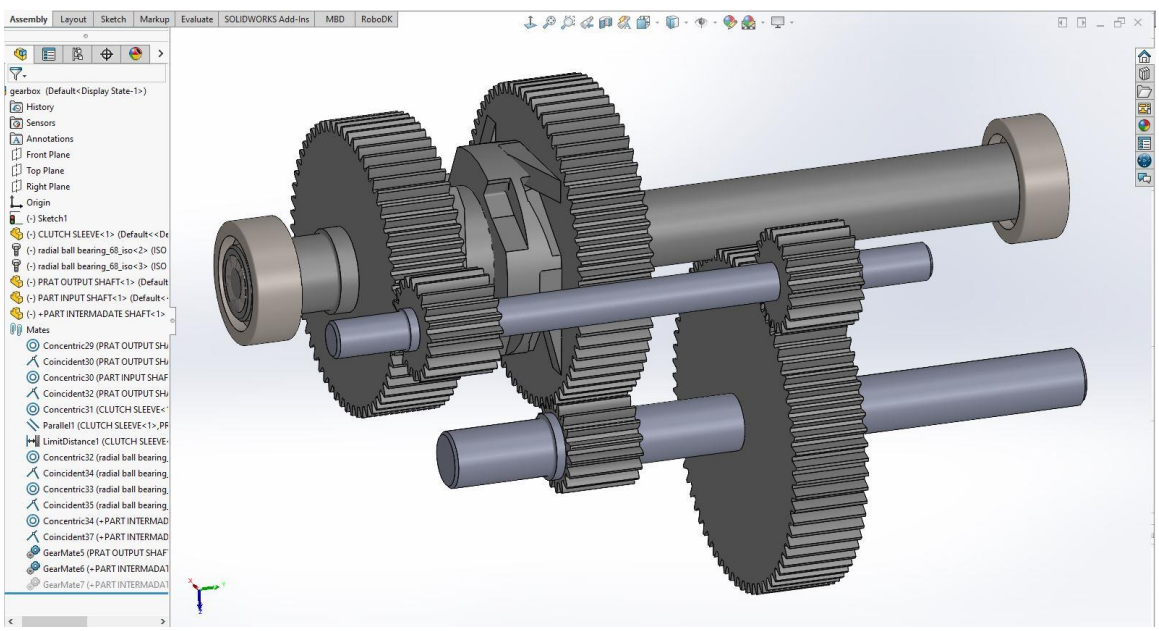

- # Finite Element Analysis

8.1.1 FEA Results and Discussion of the Output Shaft under Torsion Only

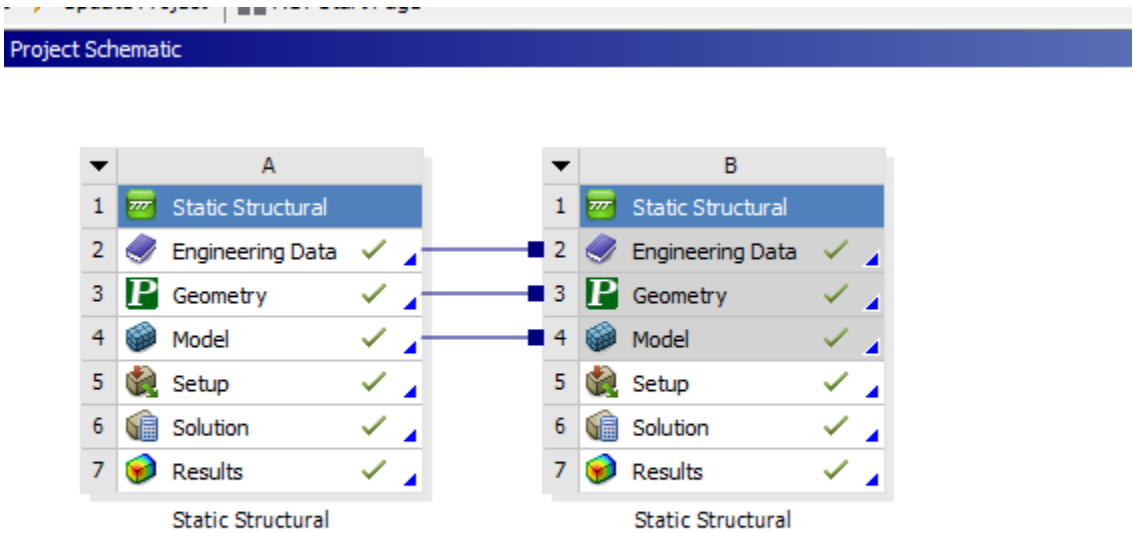

Analysis Setup and Boundary Conditions

A static structural analysis was performed on the output shaft to evaluate its structural behavior under torsional loading. The purpose of this analysis is to validate the analytical design and assess the stress distribution along the shaft, particularly in critical regions such as shoulders and diameter transitions.

Geometry

The analysis was carried out on the **output shaft only**, without including the full gearbox assembly. This simplification allows for an efficient and focused evaluation of the shaft under its primary loading condition.

Material

The shaft material was defined as **structural steel**, with standard mechanical properties (Young's modulus, Poisson's ratio, and yield strength).

Boundary Conditions

To ensure a stable and physically meaningful solution, the following boundary conditions were applied:

- A **Fixed Support** was applied on the **internal bearing seat** of the output shaft. This constraint prevents all translational and rotational degrees of freedom at that location and represents the support provided by the bearing inside the gearbox.
- A **Moment load** was applied on the **outer end of the shaft**, corresponding to the interface with the robotic finger.
  The applied torque was:

$T=1.94$ N.m

This value represents the output torque in the force mode, as obtained from the design calculations.

Mesh

A refined mesh was generated, with additional refinement in regions of geometric discontinuity such as shoulders and fillets to accurately capture stress concentration effects.

8.1.2 Analytical Calculation

For a solid circular shaft subjected to pure torsion, the maximum shear stress is given by:

$\tau nom=16T/\pi d3$

Substituting:

$T=1940N.mm, d=8mm$
$\tau nom=16(1940) /\pi(8)3 =19.3MPa$

This value represents the **nominal shear stress** in the uniform region of the shaft.

8.1.3 FEA Results

The shear stress in the **uniform cylindrical section** of the shaft was approximately:

$\tau \approx 18.9$ MPa

The **maximum shear stress** occurred at the **shoulder region**, reaching:

$\tau_{max} \approx 42.6$ MPa

The deformation pattern indicated a **pure torsional behavior**, with no significant bending observed in this loading case.

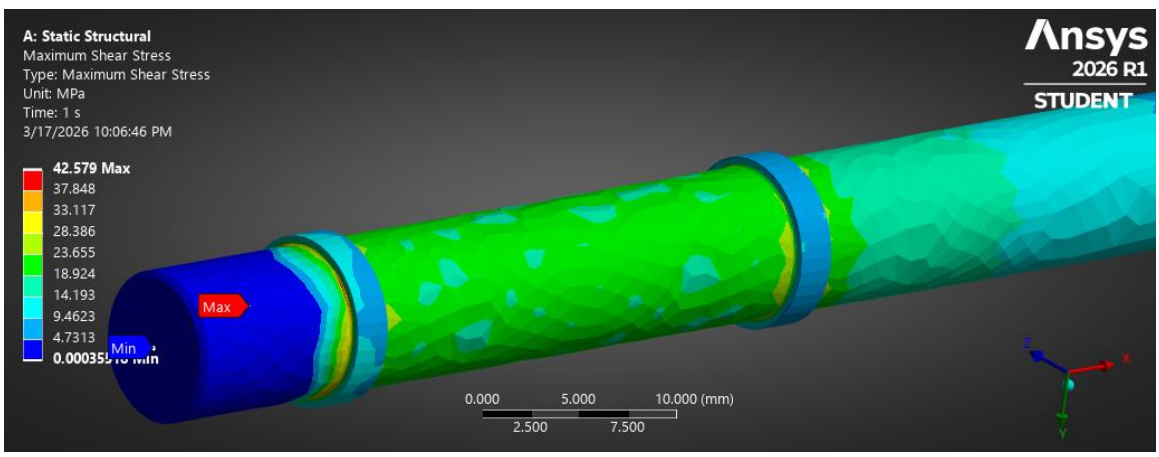

8.1.4 Discussion

The FEA results show excellent agreement with the analytical calculations. The nominal shear stress obtained from theory (**19.3 MPa**) closely matches the FEA result (**≈18.9 MPa**) in the uniform shaft region. This confirms the correctness of the applied boundary conditions and loading.

However, a significant increase in stress was observed at the shoulder, where the shaft diameter changes. This increase is due to **torsional stress concentration** caused by geometric discontinuity.

The stress concentration factor can be estimated as:

$K_{ts} = \tau_{nom} / \tau_{max} = 19.342.6 \approx 2.2$

This value is consistent with typical stress concentration factors for stepped shafts under torsion.

It is important to note that such stress concentration effects are **not captured by analytical calculations**, which assume a uniform shaft. Therefore, the FEA provides a more realistic representation of the stress distribution.

8.1.5 Design Validation

From the design calculations, the required shaft diameter was approximately:

$d_{required} \approx 6.34 \text{ mm}$

However, a diameter of **8 mm** was selected in the final design to ensure safety and manufacturability.

The FEA results confirm that:

- The shaft operates within a **safe stress range**
- The design is **conservative**
- The most critical region is the **shoulder**, not the main shaft body

---

8.1.6 Conclusion

The output shaft demonstrates safe and reliable performance under the applied torsional load of **1.94 N·m**. The analytical and numerical results are in strong agreement in the uniform shaft region, validating the design approach.

The FEA analysis highlights the importance of geometric features, particularly the shoulder, as the governing location for stress concentration. Overall, the selected shaft diameter of **8 mm** provides an adequate safety margin for the intended application.

8.2 FEA Results and Discussion of the Output Shaft under Combined Torsion and Bending

A second static structural analysis was performed on the output shaft under combined torsional and bending loading in order to represent a more realistic operating condition. The output shaft was selected for detailed investigation because it carries the highest transmitted torque in the system, incorporates the dog clutch, and acts as the direct output member coupled to the first phalanx. According to the analytical design, the output shaft in force mode transmits approximately 1.94 N.m, and a conservative bending moment of about 500 N.m was assumed in the shaft sizing stage. This led to an equivalent torque of 2003 N.m, from which the required shaft diameter was estimated as 6.34 mm. The final adopted diameter was increased to 8 mm, providing an intentionally conservative design margin.

8.2.1 Boundary Conditions

In this study, the shaft was modeled as an individual solid part. A fixed support was applied at the inner bearing seat to prevent rigid body motion, while the external end of the shaft was loaded by the design output torque. In addition, a transverse force was applied to generate the conservative bending moment considered in the analytical design. This setup represents the combined effect of torque transmission and external bending caused by the output coupling and shaft-mounted components.

8.2.2 Shear Stress Evaluation

The finite element results showed that the maximum shear stress reached approximately **44.5 MPa**, with the peak occurring locally at the shoulder region. This value is slightly higher than the allowable shear stress adopted in the preliminary shaft design, which was taken as $\tau_{allow}=40$ MPa. However, this exceedance is localized and is caused by geometric stress concentration at the shoulder rather than by excessive stress along the full shaft length. Since the analytical design equations assume a uniform circular shaft without geometric discontinuities, they do not capture the local amplification of stress caused by shoulders and fillets. Therefore, the difference between the analytical value and the FEA peak is expected and physically meaningful rather than a sign of incorrect design.

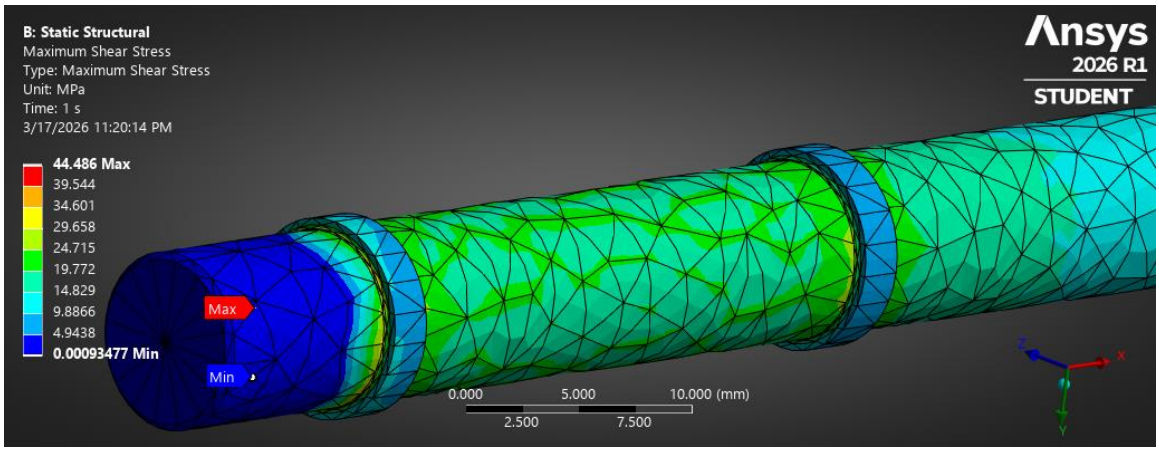

Equivalent Stress Evaluation

The equivalent (von Mises) stress was estimated analytically for the straight portion of the output shaft under combined torsion and bending using:

σvm = sqr $((\sigma b)2+(3\tau)2)$

where the bending stress is:$\sigma b=32M/\pi d3$

and the torsional shear stress is:

$\tau=16T/\pi d3$

Using the design values from the report, $=1.94N\cdot m=1940N\cdot mm$, $M\approx 500\ N\cdot mm$, and $d=8$ mm, the calculated stresses are:

$\tau\approx 19.3$ MPa
$\sigma b\approx 9.95$ MPa

Thus, the nominal equivalent stress becomes:

$\sigma vm=$ sqr$((9.95)2+3(19.3)2)\approx 34.9$ MPa

The FEA result showed a maximum equivalent stress of approximately **77.1 MPa**. This value is higher than the analytical result because the analytical calculation represents the **nominal stress in the uniform shaft section** Meanwhile, the FEA detected stress concentration at the shoulder area. Therefore, the analytical result and the numerical result are consistent, with the FEA revealing the local stress amplification caused by the geometric discontinuity.

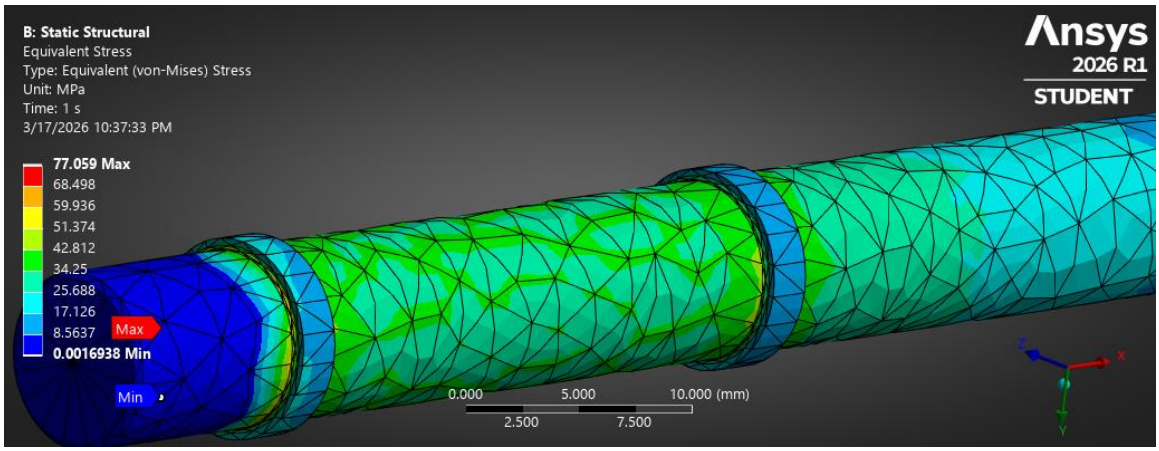

8.2.3 Interpretation

The combined results show that the selected output shaft diameter remains acceptable for the intended application. The analytical method used in the report was appropriate for initial sizing, while the FEA provided a more realistic representation of the stress field, especially near geometric discontinuities. The shoulder is clearly the most critical local region, and its stress level is governed by stress concentration rather than by insufficient global shaft diameter. Consequently, the output shaft design cannot be considered poor or unsafe solely because the local maximum shear stress slightly exceeds the assumed allowable design shear stress. Rather, the results indicate that the shaft is generally safe, while the shoulder is the critical location that may benefit from local geometric improvement, such as increasing the fillet radius or smoothing the diameter transition.

8.2.4 Conclusion

The second FEA study confirms that the output shaft behaves safely under combined torsion and bending. Although the maximum local shear stress at the shoulder slightly exceeds the preliminary allowable shear stress used in manual sizing, this is a localized stress concentration effect and does not indicate overall shaft failure. The equivalent stress remains well below the expected yield strength of a typical steel shaft material, confirming that the design remains structurally acceptable in static loading.

8.3 Gear Tooth Stress Analysis and Comparison

8.3.1 Analytical vs Numerical Comparison

The bending stress in the critical pinion tooth was first estimated analytically using the Lewis equation, which yielded a value of approximately:

$\sigma_{Lewis} \approx 110.6$ MPa

To validate this result, finite element analyses were performed using both 2D and 3D models of the gear tooth under the same tangential loading conditions.

8.3.2 2D Finite Element Results

The 2D analysis showed a maximum equivalent stress of approximately:

$\sigma_{2D} \approx 143.4$ MPa

The maximum stress was clearly located at the **tooth root**, confirming that the dominant failure mode is bending, as assumed in the Lewis theory.

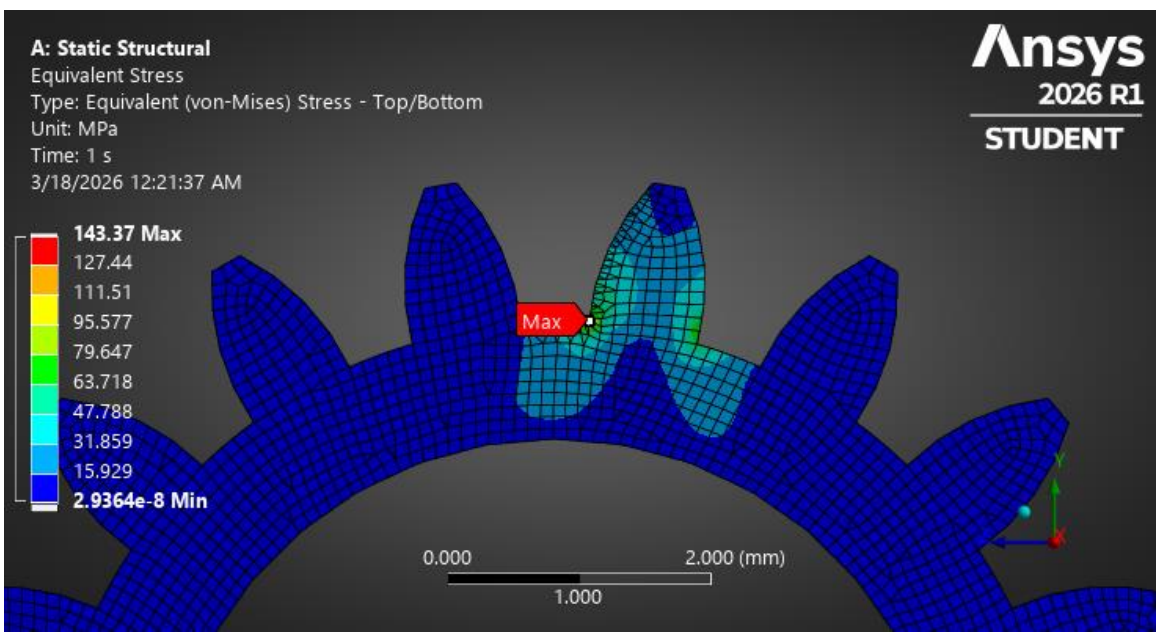

8.3.3 3D Finite Element Results

The 3D analysis resulted in a maximum equivalent stress of approximately:

$\sigma_{3D} \approx 145.2 \text{ MPa}$

Similar to the 2D case, the highest stress was concentrated at the tooth root region, with a very similar stress distribution pattern.

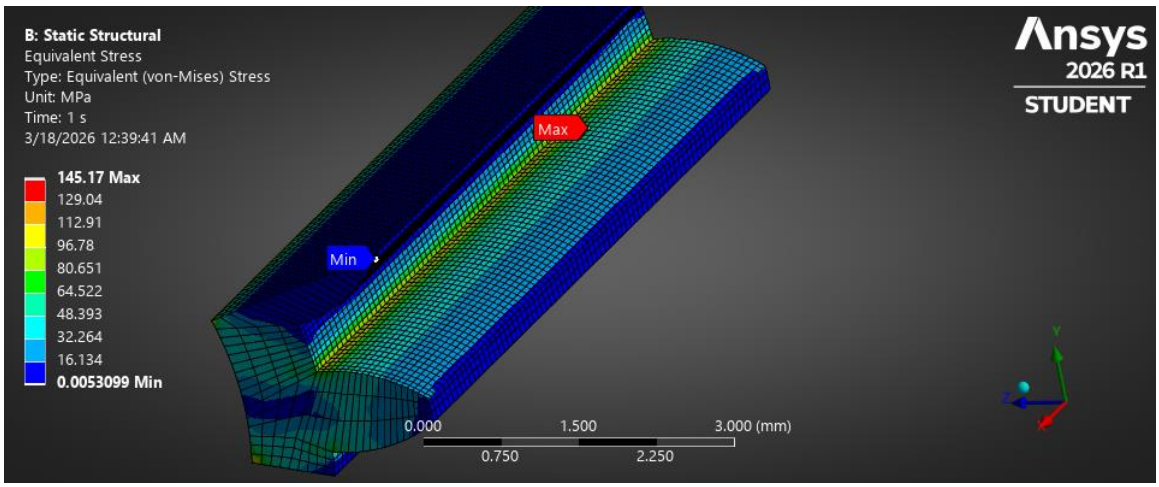

8.3.4 Discussion of Differences

The numerical results are higher than the analytical value by approximately:

- **~29% for 2D**
- **~31% for 3D**

This difference is expected because the Lewis equation is based on a simplified beam assumption and does not account for:

- the actual tooth geometry
- the fillet radius at the root
- local stress concentration effects

In contrast, the finite element models capture the real geometry and therefore provide a more realistic estimation of the maximum stress.

8.3.5 2D vs 3D Comparison

The difference between the 2D and 3D results is minimal, indicating that the stress distribution is nearly uniform across the face width of the tooth. This confirms that the 2D model is sufficient to represent the bending behavior of the gear tooth under the given loading conditions.

8.3.6 Conclusion

The results demonstrate good agreement between analytical and numerical approaches. While the finite element results are higher due to geometric effects, all methods consistently identify the tooth root as the critical region. The close match between 2D and 3D analyses validates the modeling approach and confirms that bending is the governing failure mechanism in the gear tooth.

8.4 Dog Clutch Structural Analysis

8.4.1 Model Description and Assumptions

A simplified finite element model of the dog clutch was developed to evaluate the local stress distribution during torque transmission. Instead of modeling the full clutch assembly, a **single pair of engaging teeth** was extracted and analyzed.

The model preserves the essential geometric features used in the analytical design, including:

- Mean transmission radius ≈ 8 mm
- Tooth axial width ≈ 2.5 mm
- Tooth thickness ≈ 3 mm
- Engagement depth ≈ 2.5 mm
- Chamfer angle ≈ 15°
- Presence of root fillets

To ensure numerical stability and represent the engagement condition:

- One body was fully constrained (Fixed Support)
- A force of **250 N** was applied on the mating tooth
- A Remote Displacement was used to restrict motion to the loading direction
- Frictionless contact was defined between the two contacting surfaces

This setup represents a **static and conservative loading case**, corresponding to torque transmission through two effective dogs.

8.4.2 Load Justification

The applied force was derived from the design torque:

$T = 4\ N \cdot m$

Using the mean transmission radius:

$r_m = 8\ mm$

The total tangential force becomes:

$F_t = \frac{T}{r_m} = 500\ N$

Assuming load sharing between two active teeth:

$F_{dog} = 250\ N$

8.4.3 Analytical Stress Estimation

From the design calculations:

Bearing (contact) stress:

$\sigma_{bearing} \approx 40\ MPa$

Shear stress:

$\tau_{theory} \approx 33.3\ MPa$

These values represent **average stresses**, assuming uniform load distribution over the contact area.

8.4.4 Finite Element Results

The finite element analysis showed:

- Maximum shear stress:

$\tau_{max} \approx 172$ MPa

The stress distribution indicates that:

- The highest stresses occur at **geometric discontinuities**, particularly:
  - Tooth root region
  - Edges of the contact zone
  - Chamfer transitions
- The contact region itself exhibits **moderate and distributed stress levels**, significantly lower than the peak values.

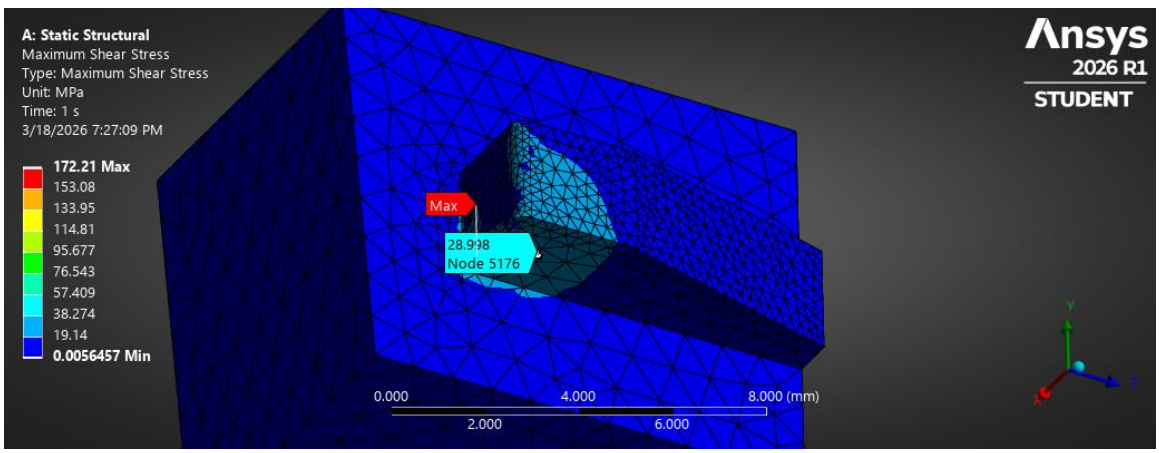

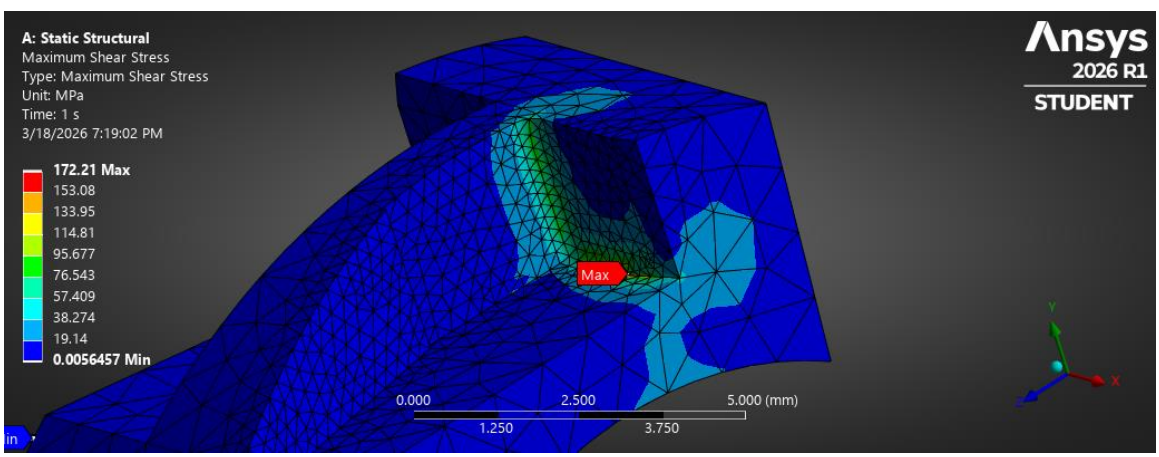

8.4.5 Comparison Between Analytical and Numerical Results

A key distinction must be made between:

- **Analytical results** → average stresses
- **FEA results** → local peak stresses

At Contact Surfaces

At the main contact area between the two teeth:

- The stress levels are **consistent with the analytical bearing stress (~40 MPa)**
- The load is distributed over the surface as assumed in the design stage

This confirms that the analytical model provides a reasonable estimation of the **global load transfer behavior**.

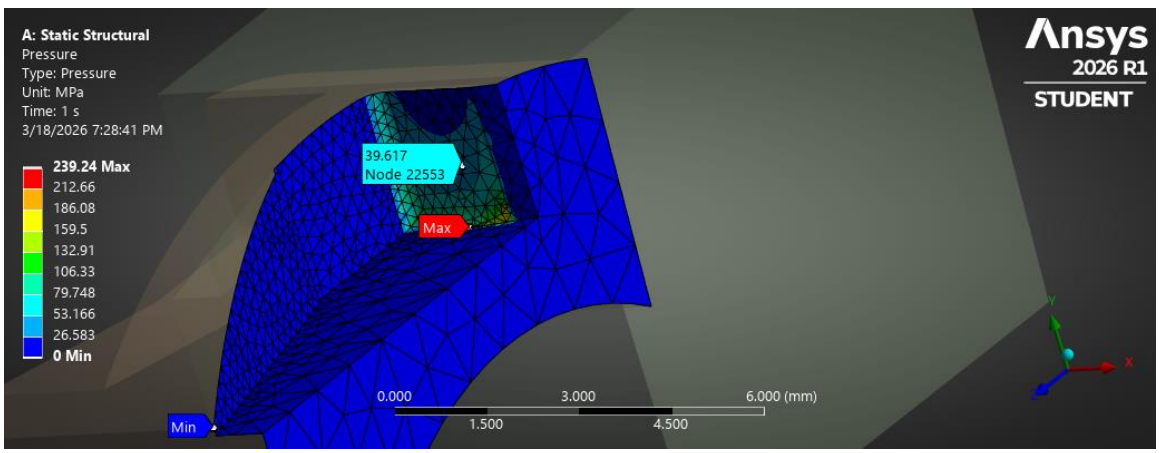

At Critical Regions (Stress Concentration)

However, the finite element model reveals significantly higher stresses at localized regions:

- Tooth root
- Edges of the contact interface
- Sharp geometric transitions

These regions experience:

$\tau_{local} \gg \tau_{theory}$

This discrepancy arises because the analytical model:

- Assumes uniform stress distribution
- Neglects geometric discontinuities
- Does not capture stress concentration effects

Whereas the FEA model includes:

- Real geometry (fillets, chamfers)
- Local contact mechanics
- Non-uniform load distribution

8.4.5 Engineering Interpretation

The results indicate that:

- The **overall design is acceptable from an average stress perspective**
- The contact surfaces behave as expected and match analytical predictions
- However, **localized stress concentrations are significant** and must be considered in design evaluation

Importantly:

- The critical regions identified by FEA do not necessarily indicate immediate failure
- They highlight potential locations for:
    - crack initiation
    - wear concentration
    - fatigue risk

8.4.6 Conclusion

The analytical and numerical results are in good agreement at the global level, particularly in the contact region where the load transfer occurs. However, the finite element analysis reveals important local effects that are not captured by simplified calculations.

Therefore, while the analytical model is sufficient for initial design sizing, the FEA results provide a more realistic assessment of critical stress locations, ensuring a more reliable evaluation of the clutch performance.

• Failure Modes Analysis

To ensure a comprehensive evaluation of the proposed robotic finger system, potential failure modes were identified and analyzed based on the results obtained from analytical calculations, CAD modeling, and finite element simulations. Each subsystem presents specific failure risks depending on its function and loading conditions.

9.1 Failure Modes in the Finger Mechanism

The finger mechanism relies on a coupled four-bar linkage system to achieve coordinated motion between the phalanges. Although the kinematic analysis and motion simulation confirmed smooth and continuous movement, several potential failure modes may arise in practical implementation.

One of the primary risks is joint wear and clearance development. Since the mechanism depends on multiple revolute joints, repeated motion may lead to increased backlash over time, which can reduce motion accuracy and affect synchronization between phalanges.

Another possible failure mode is linkage misalignment due to manufacturing tolerances or assembly errors. Because the mechanism is highly coupled, even small deviations in link lengths or pivot locations may lead to noticeable errors in motion trajectory.

Additionally, excessive loading or unintended external forces applied at the fingertip may introduce bending stresses in the links that were not fully considered in the kinematic design stage.

9.2 Gearbox Failure Modes

The gearbox operates under two distinct modes (speed and force), and its components are subjected to varying torque and load conditions. Based on the analytical and numerical results, several critical failure modes can be identified.

The most significant failure risk in the gear system is gear tooth bending failure. The finite element analysis confirmed that the highest stress occurs at the tooth root, which is consistent with the assumptions of the Lewis equation. Repeated loading cycles may lead to fatigue crack initiation in this region.

Another potential failure mode is surface wear or pitting due to contact stresses between meshing gears. Although the analytical design suggests that contact stress is within acceptable limits, real-world conditions such as poor lubrication or misalignment may accelerate surface degradation.

The intermediate shaft is particularly vulnerable due to the combined effect of high torque and gear forces. Excessive loading or misalignment may lead to bending failure or increased deflection, which can affect gear meshing quality.

9.3 Output Shaft Failure Modes

The output shaft is the most critical component from a functional perspective, as it transmits the maximum torque and directly drives the finger mechanism.

The finite element analysis revealed that the highest stress occurs at the shoulder region due to stress concentration. Therefore, the primary failure mode is localized yielding or fatigue crack initiation at this location. While the overall stress levels are within acceptable limits, repeated loading cycles may lead to progressive damage over time.

Another possible failure mode is excessive torsional deformation if the applied load exceeds the design limit. This may affect the precision of motion transmission and lead to reduced system performance.

Additionally, since the output shaft is directly coupled to the first phalanx, any failure in this component results in complete system failure, making it a critical نقطة ضعف in the design.

9.4 Dog Clutch Failure Modes

The dog clutch is responsible for switching between speed and force modes through positive mechanical engagement. While the analytical and numerical analyses confirm that the average stresses are acceptable, several failure modes are associated with its operation.

The most critical issue is impact loading during engagement. If the clutch engages while there is a speed difference between components, significant shock forces may occur, leading to edge damage or plastic deformation of the dog teeth.

Another failure mode is localized stress concentration at the tooth edges and roots, as observed in the finite element analysis. These regions may act as initiation points for cracks or wear under repeated engagement cycles.

Wear due to repeated engagement and disengagement is also a concern, particularly if the system operates frequently between modes.

9.5 System-Level Failure Considerations

At the system level, failure may occur due to the interaction between subsystems rather than failure of a single component.

One key risk is misalignment between the gearbox and the finger mechanism. Since the output shaft serves both as a transmission element and as a rotational joint axis, any misalignment can lead to uneven loading, increased friction, and premature wear.

Another important factor is the absence of a compliant element in the transmission system. The direct coupling design results in rigid load transfer, which may amplify shock loads and increase stress on mechanical components.

Finally, long-term fatigue behavior represents a potential failure mode that was not fully addressed in the current analysis. While the design is safe under static loading conditions, cyclic loading may lead to gradual material degradation and eventual failure.

9.6 Summary of Failure Modes

The main potential failure modes identified in the system include:

- Gear tooth bending fatigue at the root
- Localized yielding and fatigue at shaft shoulders
- Wear and impact damage in the dog clutch
- Joint wear and backlash in the linkage mechanism
- Misalignment-induced stress and performance degradation
- Fatigue failure under cyclic loading conditions

These failure modes highlight the importance of careful manufacturing, proper material selection, and controlled operating conditions to ensure reliable system performance.

• Conclusion

This project presented the design, analysis, and validation of a robotic finger mechanism integrating a compact two-speed gearbox with a coupled four-bar linkage system. The proposed design successfully achieved coordinated finger motion using a single actuator, while maintaining a simple and compact mechanical architecture suitable for educational and experimental applications.

The kinematic synthesis ensured that the desired finger configurations were accurately reproduced, and the motion analysis confirmed smooth and stable dynamic behavior without undesirable discontinuities. The gearbox design effectively provided two distinct operating modes, enabling both rapid motion and sufficient torque generation to meet the functional requirements of the system.

Structural validation through analytical calculations and finite element analysis demonstrated strong agreement in the global behavior of components, while also highlighting the importance of local stress concentrations, particularly in critical regions such as shaft shoulders and gear tooth roots. The fatigue assessment further emphasized that, although the design is generally safe, localized geometric effects play a key role in long-term durability.

In addition, the analysis of failure modes and design limitations provided valuable insight into the practical challenges associated with real-world implementation, including sensitivity to alignment, manufacturing tolerances, and cyclic loading conditions. Based on these observations, several targeted design improvements were proposed to enhance system reliability, reduce stress concentrations, and improve overall performance.

In conclusion, the developed design meets the primary objectives of the project and demonstrates a successful integration of kinematic design, mechanical transmission, and structural analysis. The results confirm that the system is mechanically feasible and provides a solid foundation for further refinement, optimization, and potential physical implementation.